# LINEA ROSSA LLC

## *GLR-U96 & GLR-U97 WINDOW WALL SYSTEMS - LMI (HVHZ)(IMPACT)*

INSTALLATION NOTES:

1. SEE SHEET 9 FOR ANCHOR TYPE REQUIREMENTS, MINIMUM EMBEDMENT, AND MINIMUM EDGE DISTANCES. ALL ANCHOR REQUIREMENTS MUST BE ADHERED TO. ANY DEVIATIONS FROM ANCHOR REQUIREMENTS REQUIRES SEPARATE EVALUATION AND APPROVAL.

2. ONE (1) INSTALLATION ANCHOR IS REQUIRED AT EACH ANCHOR LOCATION SHOWN.

3. THE NUMBER OF INSTALLATION ANCHORS DEPICTED IS THE MINIMUM NUMBER OF ANCHORS TO BE USED FOR PRODUCT INSTALLATION.

4. INSTALL INDIVIDUAL INSTALLATION ANCHORS WITHIN A TOLERANCE OF ±1/2 INCH OF THE DEPICTED LOCATION IN THE ANCHOR LAYOUT DETAIL (I.E., WITHOUT CONSIDERATION OF TOLERANCES). TOLERANCES ARE NOT CUMULATIVE FROM ONE INSTALLATION ANCHOR TO THE NEXT.

5. SHIM AS REQUIRED AT EACH INSTALLATION ANCHOR WITH LOAD BEARING SHIM(S). MAXIMUM ALLOWABLE SHIM STACK TO BE 1/2 INCH. SHIM WHERE SPACE OF 1/16 INCH OR GREATER OCCURS. SHIM(S) SHALL BE CONSTRUCTED OF HIGH DENSITY PLASTIC OR BETTER.

6. MINIMUM EMBEDMENT AND EDGE DISTANCE EXCLUDE WALL FINISHES, INCLUDING BUT NOT LIMITED TO STUCCO, FOAM, BRICK VENEER, AND SIDING.

7. INSTALLATION ANCHORS AND ASSOCIATED HARDWARE MUST BE MADE OF CORROSION RESISTANT MATERIAL OR HAVE A CORROSION RESISTANT COATING.

8. FOR HOLLOW BLOCK AND GROUT FILLED BLOCK, DO NOT INSTALL INSTALLATION ANCHORS INTO MORTAR JOINTS. EDGE DISTANCE IS MEASURED FROM FREE EDGE OF BLOCK OR EDGE OF MORTAR JOINT INTO FACE SHELL OF BLOCK.

9. INSTALLATION ANCHORS SHALL BE INSTALLED IN ACCORDANCE WITH ANCHOR MANUFACTURER'S INSTALLATION INSTRUCTIONS, AND ANCHORS SHALL NOT BE USED IN SUBSTRATES WITH STRENGTHS LESS THAN THE MINIMUM STRENGTH SPECIFIED BY THE ANCHOR MANUFACTURER.

10. INSTALLATION ANCHOR CAPACITIES FOR PRODUCTS HEREIN ARE BASED ON SUBSTRATE MATERIALS WITH THE FOLLOWING PROPERTIES:
    A. WOOD - MINIMUM SPECIFIC GRAVITY OF 0.55.
    B. CONCRETE -MINIMUM COMPRESSIVE STRENGTH OF 3000 PSI.
    C. MASONRY - CMU UNIT STRENGTH CONFORMS TO ASTM C-90, WITH MIN. COMPRESSIVE STRENGTH OF 2000 PSI AND GROUT CONFORMS TO ASTM C 476, MIN. GROUT COMPRESSIVE STRENGTH OF 2000 PSI.
    D. STEEL - MINIMUM YIELD STRENGTH OF 36 KSI. MINIMUM 16 GA. WALL THICKNESS.
    E. ALUMINUM - MINIMUM 1/8 INCH THICK 6063-T5 ALUMINUM.

GENERAL NOTES:

1. THE PRODUCT SHOWN HEREIN IS DESIGNED AND MANUFACTURED TO COMPLY WITH THE CURRENT FLORIDA BUILDING CODE (FBC), **INCLUDING** HVHZ AND HAS BEEN EVALUATED ACCORDING TO THE FOLLOWING:
    - TAS 201-94
    - TAS 202-94
    - TAS 203-94
    - AAMA 501-15

2. ADEQUACY OF THE EXISTING STRUCTURAL CONCRETE/MASONRY, 2X FRAMING AND METAL STUD FRAMING AS A MAIN WIND FORCE RESISTING SYSTEM CAPABLE OF WITHSTANDING AND TRANSFERRING APPLIED PRODUCT LOADS TO THE FOUNDATION IS THE RESPONSIBILITY OF THE ENGINEER OR ARCHITECT OF RECORD FOR THE PROJECT OF INSTALLATION.

3. 1X AND 2X BUCKS (WHEN USED) SHALL BE DESIGNED AND ANCHORED TO PROPERLY TRANSFER ALL LOADS TO THE STRUCTURE. BUCK DESIGN AND INSTALLATION IS THE RESPONSIBILITY OF THE ENGINEER OR ARCHITECT OF RECORD FOR THE PROJECT OF INSTALLATION.

4. THE INSTALLATION DETAILS DESCRIBED HEREIN ARE GENERIC AND MAY NOT REFLECT ACTUAL CONDITIONS FOR A SPECIFIC SITE. IF SITE CONDITIONS CAUSE INSTALLATION TO DEVIATE FROM THE REQUIREMENTS DETAILED HEREIN, A LICENSED ENGINEER OR ARCHITECT SHALL PREPARE SITE SPECIFIC DOCUMENTS FOR USE WITH THIS DOCUMENT.

5. APPROVED IMPACT PROTECTIVE SYSTEM **IS NOT REQUIRED** ON THIS PRODUCT IN AREAS REQUIRING IMPACT RESISTANCE. SEE SHEET 4 FOR GLAZING DETAIL. GLASS SHALL MEET THE REQUIREMENTS OF ASTM E 1300.

6. GLASS MEETS THE REQUIREMENTS OF ASTM E 1300. SEE SHEET 4 FOR GLAZING DETAIL.

7. FRAME MATERIAL: ALUMINUM 6005-T5/ALUMINUM 6063-T6

8. ALL STRUCTURAL MATERIALS & DISSIMILAR METALS SHALL BE PROTECTED, TREATED, PAINTED, COATED, AND/OR ISOLATED AS REQUIRED IN THE APPLICABLE SECTIONS OF THE CURRENT FLORIDA BUILDING CODE AND REFERENCED DESIGN SPECIFICATIONS.

TABLE OF CONTENTS


| SHEET | SHEET DESCRIPTION |
|---|---|
| 1 | INSTALLATION & GENERAL NOTES |
| 2 | ELEVATION & ANCHOR LAYOUT |
| 3 | ELEVATION, ANCHOR LAYOUT, & ALTERNATE SHAPES |
| 4 | GLAZING DETAIL & GLASS LOAD TABLES |
| 5 | JAMBS DESIGN PRESSURE TABLES |
| 6 | MULLION DESIGN PRESSURE TABLES |
| 7 | CORNER MULLION DESIGN PRESSURE TABLES |
| 8 | TYPE A & B ANCHOR TABLES |
| 9 | TYPE C & D ANCHOR TABLES |
| 10 | VERTICAL SECTIONS |
| 11 | VERTICAL SECTIONS |
| 12 | HORIZONTAL SECTIONS |
| 13 | HORIZONTAL SECTIONS |
| 14 | HORIZONTAL SECTIONS |
| 15 | BILL OF MATERIALS & COMPONENTS |
| 16 | COMPONENTS |


INSTRUCTIONS FOR USE:

1. DETERMINE DESIGN WIND LOAD REQUIREMENTS BASED ON WIND VELOCITY, BLDG, HEIGHT, WIND ZONE USING APPLICABLE ASCE 7 STANDARD.
2. SEE CHART ON SHEET 4 FOR DESIGN LOAD CAPACITY OF DESIRED GLASS SIZE. GLASS SELECTION SHALL BE IN ACCORDANCE WITH ASTM E1300.
3. CHECK MULLION CAPACITY FOR A GIVEN SPACING AND HEIGHT USING CHARTS ON SHEETS 5 THROUGH 7, THE CAPACITY SHOULD EXCEED THE DESIGN LOAD.
4. USING CHARTS ON SHEET 8 & 9 SELECT ANCHOR OPTION WITH DESIGN RATING MORE THAN DESIGN LOAD SPECIFIED IN STEP 1 ABOVE.
5. THE LOWEST VALUE RESULTING FROM STEP 2, 3, AND 4 SHALL APPLY TO ENTIRE SYSTEM.


LINEA ROSSA WINDOWS & DOORS

1850 NW. 84TH AVE., STE. 114
DORAL, FL 33126
PH: (305)815-8797


TITLE: *GLR-U96 & GLR-U97 WINDOW WALL SYSTEMS - LMI (HVHZ)(IMPACT)*

INSTALLATION & GENERAL NOTES


PREPARED BY: BUILDING DROPS, INC.
398 E. DANIA BEACH BLVD., STE. 338
DANIA BEACH, FL 33004
PH: (954)399-8478
FAX: (954)744.4738
WEB: www.buildingdrops.com


| REMARKS | BY | DATE |
|---|---|---|
| | | |
| | | |
| | | |
| | | |

THE INSTALLATION DETAILS DESCRIBED HEREIN ARE GENERIC AND MAY NOT REFLECT ACTUAL CONDITIONS FOR A SPECIFIC SITE. IF SITE CONDITIONS CAUSE INSTALLATION TO DEVIATE FROM THE REQUIREMENTS DETAILED HEREIN, A LICENSED ENGINEER OR ARCHITECT SHALL PREPARE SITE SPECIFIC DOCUMENTS FOR USE WITH THIS DOCUMENT.

Digitally signed by Hermes F. Norero, P.E
Reason: I am approving this document
Date: 2023.10.12 10:22:04 -04'00'

HERMES F. NORERO
LICENSE
No. 73778
STATE OF FLORIDA
PROFESSIONAL ENGINEER


HERMES F. NORERO, P.E.
LICENSE NO. 73778
398 E. DANIA BEACH BLVD., STE. 338
DANIA BEACH, FL 33004
FBPE CERT. OF AUTHORIZATION NO. 29578


FL41922

DATE: 10.06.2023

DWG. BY: SH | CHK. BY: HFN

SCALE: NTS

DWG. #: LRA022

SHEET: 1 OF 16

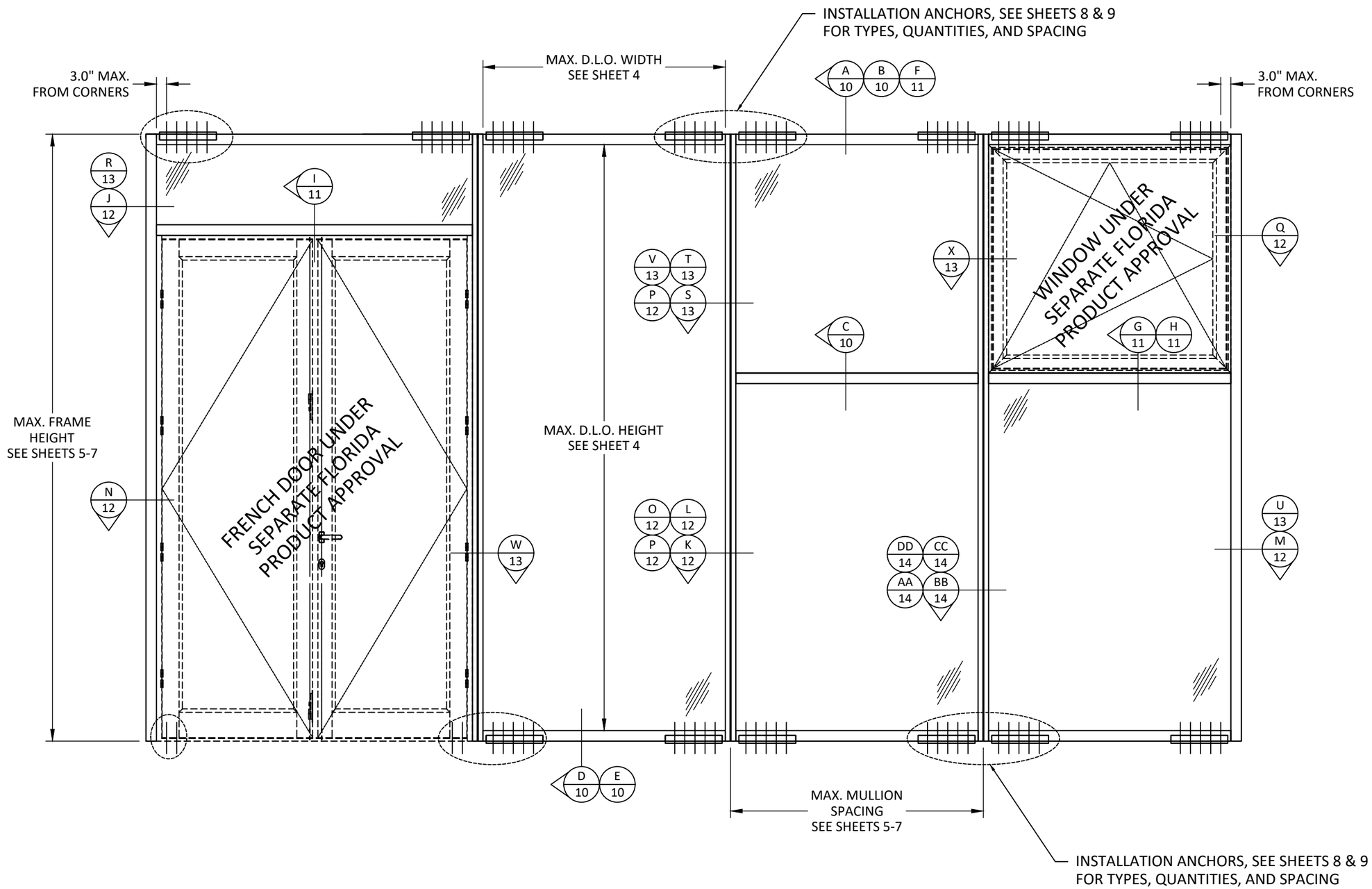



LINEA ROSSA
WINDOWS & DOORS

1850 NW. 84TH AVE., STE. 114
DORAL, FL 33126
PH: (305)815-8797


TITLE: *GLR-U96 & GLR-U97 WINDOW WALL SYSTEMS - LMI (HVHZ)(IMPACT)*

ELEVATION AND ANCHOR LAYOUT


PREPARED BY: BUILDING DROPS, INC.
398 E. DANIA BEACH BLVD., STE. 338
DANIA BEACH, FL 33004
PH: (954)399-8478
FAX: (954)744.4738
WEB: www.buildingdrops.com


| REMARKS | BY | DATE |
|---|---|---|
| | | |
| | | |
| | | |
| | | |

THE INSTALLATION DETAILS DESCRIBED HEREIN ARE GENERIC AND MAY NOT REFLECT ACTUAL CONDITIONS FOR A SPECIFIC SITE. IF SITE CONDITIONS CAUSE INSTALLATION TO DEVIATE FROM THE REQUIREMENTS DETAILED HEREIN, A LICENSED ENGINEER OR ARCHITECT SHALL PREPARE SITE SPECIFIC DOCUMENTS FOR USE WITH THIS DOCUMENT.

HERMES F. NORERO
LICENSE
No. 73778
STATE OF
FLORIDA
PROFESSIONAL ENGINEER

HERMES F. NORERO, P.E.
LICENSE NO. 73778
398 E. DANIA BEACH BLVD., STE. 338
DANIA BEACH, FL 33004
FBPE CERT. OF AUTHORIZATION NO. 29578

FL41922

DATE: 10.06.2023

DWG. BY: SH

CHK. BY: HFN

SCALE: NTS

DWG. #: LRA022

SHEET: 2 OF 16

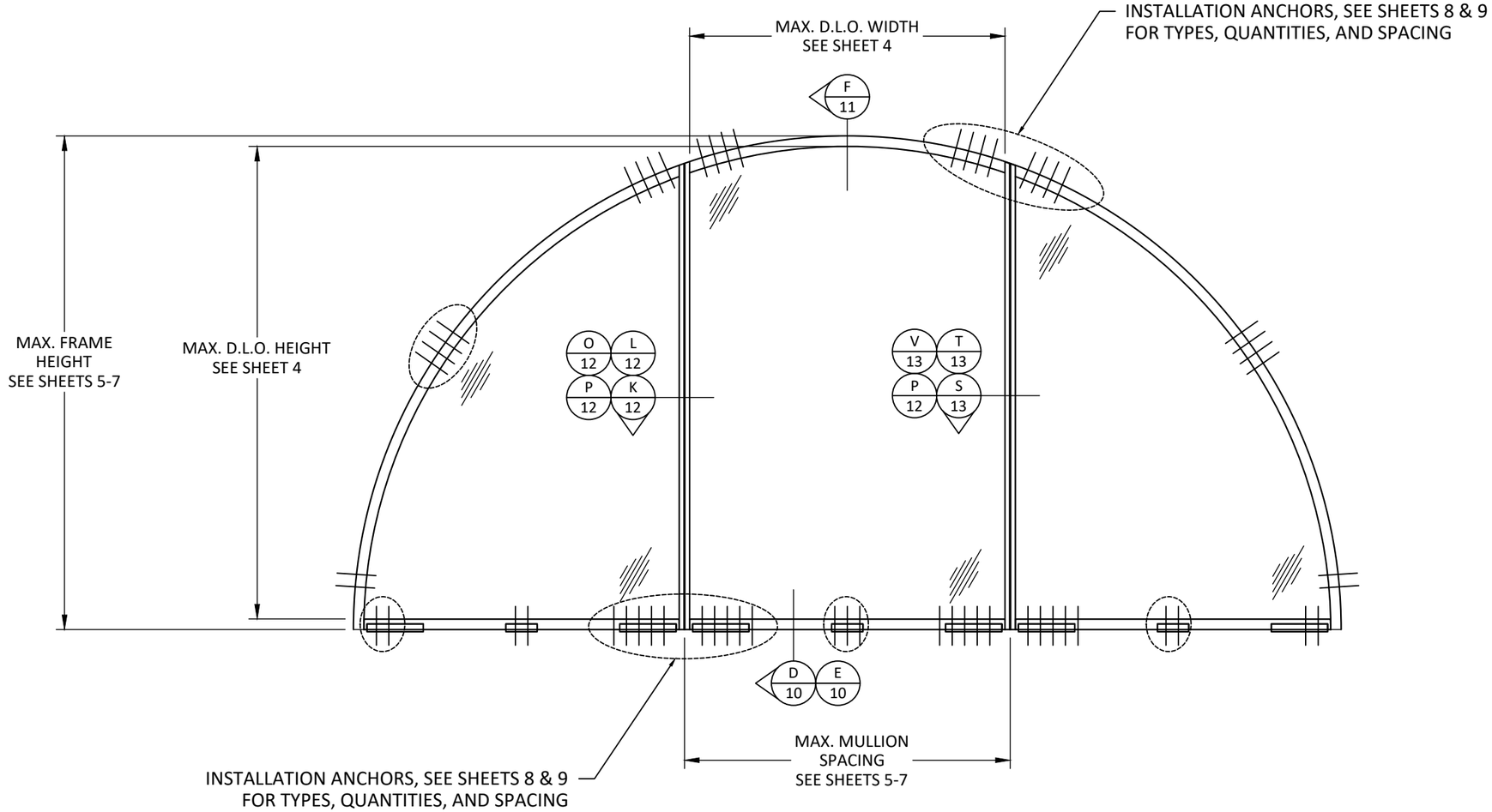


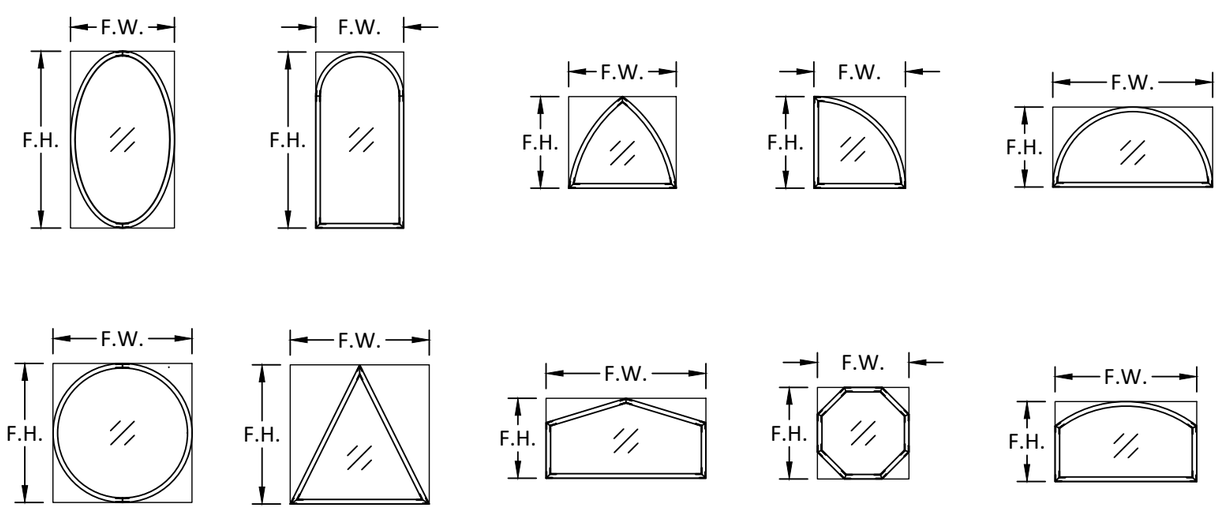


NOTE: ALLOWABLE LOAD FOR ALTERNATE SHAPES AS SHOWN ABOVE OR SIMILAR CAN BE VERIFIED BY INSCRIBING PICTURE WINDOW SHAPE WITHIN SQUARE OR RECTANGLE AS SHOWN IN DOTTED LINES AND OBTAINING ALLOWABLE LOADS FROM TABLES ON SHEETS 4-7.

LINEA ROSSA
WINDOWS & DOORS
1850 NW. 84TH AVE., STE. 114
DORAL, FL 33126
PH: (305)815-8797

TITLE: *GLR-U96 & GLR-U97 WINDOW WALL SYSTEMS - LMI (HVHZ)(IMPACT)*
ELEVATION, ANCHOR LAYOUT, & ALTERNATE SHAPES

PREPARED BY: BUILDING DROPS, INC.
398 E. DANIA BEACH BLVD., STE. 338
DANIA BEACH, FL 33004
PH: (954)399-8478
FAX: (954)744.4738
WEB: www.buildingdrops.com
BUILDING DROPS

| REMARKS | BY | DATE |
|---|---|---|
| | | |
| | | |
| | | |
| | | |

THE INSTALLATION DETAILS DESCRIBED HEREIN ARE GENERIC AND MAY NOT REFLECT ACTUAL CONDITIONS FOR A SPECIFIC SITE. IF SITE CONDITIONS CAUSE INSTALLATION TO DEVIATE FROM THE REQUIREMENTS DETAILED HEREIN, A LICENSED ENGINEER OR ARCHITECT SHALL PREPARE SITE SPECIFIC DOCUMENTS FOR USE WITH THIS DOCUMENT.

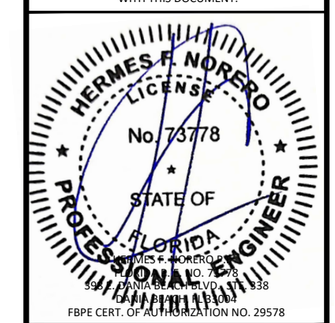


FL41922

DATE: 10.06.2023

DWG. BY: SH | CHK. BY: HFN

SCALE: NTS

DWG. #: LRA022

SHEET: 3 OF 16

# GLAZING DETAIL

| GLASS LOAD CAPACITY (PSF) | | |
|---|---|---|
| D.L.O. DIMENSIONS | | GLASS TYPE G1 |
| D.L.O. WIDTH (IN.) | D.L.O. HEIGHT (IN.) | |
| 33.5 | 91 | 84.0 |
| 39.5 | | 84.0 |
| 45.5 | | 84.0 |
| 51.5 | | 84.0 |
| 57.5 | | 84.0 |
| 63.5 | | 76.1 |
| 69.5 | | 69.5 |
| 75.5 | | 64.0 |
| 81.5 | | 59.3 |
| 33.5 | 103 | 84.0 |
| 39.5 | | 84.0 |
| 45.5 | | 84.0 |
| 51.5 | | 84.0 |
| 57.5 | | 84.0 |
| 63.5 | | 76.1 |
| 69.5 | | 69.5 |
| 75.5 | | 64.0 |
| 81.5 | | 59.3 |
| 33.5 | 115 | 84.0 |
| 39.5 | | 84.0 |
| 45.5 | | 84.0 |
| 51.5 | | 84.0 |
| 57.5 | | 84.0 |
| 63.5 | | 76.1 |
| 69.5 | | 69.5 |
| 75.5 | | 64.0 |
| 81.5 | | 59.3 |
| 33.5 | 127 | 84.0 |
| 39.5 | | 84.0 |
| 45.5 | | 84.0 |
| 51.5 | | 84.0 |
| 57.5 | | 84.0 |
| 63.5 | | 76.1 |
| 69.5 | | 69.5 |
| 75.5 | | 64.0 |

| GLASS LOAD CAPACITY (PSF) | | |
|---|---|---|
| D.L.O. DIMENSIONS | | GLASS TYPE G1 |
| D.L.O. WIDTH (IN.) | D.L.O. HEIGHT (IN.) | |
| 33.5 | 139 | 84.0 |
| 39.5 | | 84.0 |
| 45.5 | | 84.0 |
| 51.5 | | 84.0 |
| 57.5 | | 84.0 |
| 63.5 | | 76.1 |
| 69.5 | | 69.5 |
| 33.5 | 151 | 84.0 |
| 39.5 | | 84.0 |
| 45.5 | | 84.0 |
| 51.5 | | 84.0 |
| 57.5 | | 84.0 |
| 63.5 | | 76.1 |
| 33.5 | 163 | 84.0 |
| 39.5 | | 84.0 |
| 45.5 | | 84.0 |
| 51.5 | | 84.0 |
| 57.5 | | 84.0 |
| 33.5 | 175 | 84.0 |
| 39.5 | | 84.0 |
| 45.5 | | 84.0 |
| 51.5 | | 84.0 |
| 57.5 | | 84.0 |

DAYLITE OPENING DIMENSIONS:
DAYLITE OPENING WIDTH:
- MAX. MULLION SPACING - 2.5"

DAYLITE OPENING HEIGHT:
- FRAME HEIGHT - 5.0"

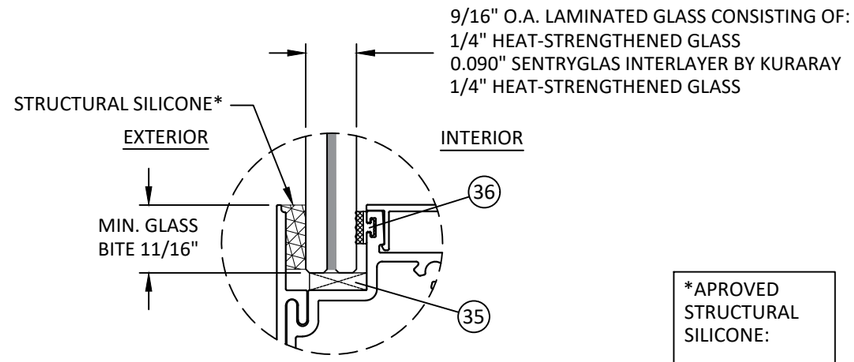


GLAZING DETAIL 1

*APROVED STRUCTURAL SILICONE:

DOWSIL - 993
DOWSIL - 983
DOWSIL - 895
DOWSIL - 795

GLAZING NOTES:
1. GLASS TYPE COMPLIES WITH ASTM E1300 REQUIREMENTS. TEMPER AND SAFETY GLAZING REQUIREMENTS SHALL BE REVIEWED ON A SITE SPECIFIC BASIS.
2. SACRIFICIAL LITE SHALL BE TEMPERED WHEN INSTALLED 30' OR HIGHER ABOVE GRADE IN HVHZ.
3. SETTING BLOCK DUROMETER HARDNESS OF 70-90 (SHORE A) AS REFERENCED IN FBC CHAPTER 24.
4. TWO APPROVED SETTING BLOCKS SHALL BE USED FOR GLASS WIDER THAN 36" AS PER FBC CHAPTER 24.
5. D.L.O. AND DESIGN PRESSURES MAY NOT EXCEED MAX. VALUES SHOWN ON TABLES IN SHEETS 4-7.


LINEA ROSSA WINDOWS & DOORS
1850 NW. 84TH AVE., STE. 114
DORAL, FL 33126
PH: (305)815-8797


TITLE: *GLR-U96 & GLR-U97 WINDOW WALL SYSTEMS - LMI (HVHZ)(IMPACT)*
GLAZING DETAIL & GLASS LOAD TABLES


PREPARED BY: BUILDING DROPS, INC.
398 E. DANIA BEACH BLVD., STE. 338
DANIA BEACH, FL 33004
PH: (954)399-8478
FAX: (954)744.4738
WEB: www.buildingdrops.com


| REMARKS | BY | DATE |
|---|---|---|
| | | |
| | | |
| | | |
| | | |


THE INSTALLATION DETAILS DESCRIBED HEREIN ARE GENERIC AND MAY NOT REFLECT ACTUAL CONDITIONS FOR A SPECIFIC SITE. IF SITE CONDITIONS CAUSE INSTALLATION TO DEVIATE FROM THE REQUIREMENTS DETAILED HEREIN, A LICENSED ENGINEER OR ARCHITECT SHALL PREPARE SITE SPECIFIC DOCUMENTS FOR USE WITH THIS DOCUMENT.


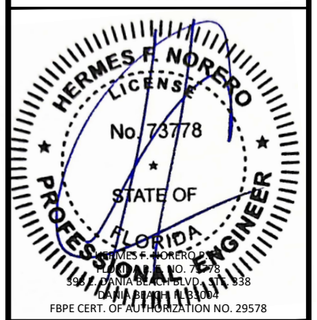


FL41922

DATE: 10.06.2023

DWG. BY: SH | CHK. BY: HFN

SCALE: NTS

DWG. #: LRA022

SHEET: 4 OF 16

# JAMB DESIGN PRESSURE TABLES

| DSIGN LOAD CAPACITY TABLE - PSF | | | | | |
|---|---|---|---|---|---|
| NOMINAL DIMS. | | | | | |
| WIDTH - W (IN.) | FRAME HEIGHT - H (IN.) | J1 | J2 | J3 | J4 |
| 36 | 96 | 75.0 | 75.0 | 115.0 | 100.0 |
| 42 | | 75.0 | 75.0 | 115.0 | 100.0 |
| 48 | | 75.0 | 75.0 | 115.0 | 100.0 |
| 54 | | 75.0 | 75.0 | 115.0 | 100.0 |
| 60 | | 75.0 | 75.0 | 115.0 | 100.0 |
| 66 | | 75.0 | 75.0 | 115.0 | 100.0 |
| 72 | | 75.0 | 75.0 | 115.0 | 100.0 |
| 78 | | 75.0 | 75.0 | 100.0 | 100.0 |
| 84 | | 75.0 | 75.0 | - | 100.0 |
| 36 | 108 | 75.0 | 75.0 | 115.0 | 100.0 |
| 42 | | 75.0 | 75.0 | 115.0 | 100.0 |
| 48 | | 75.0 | 75.0 | 115.0 | 100.0 |
| 54 | | 75.0 | 75.0 | 115.0 | 100.0 |
| 60 | | 75.0 | 75.0 | 115.0 | 100.0 |
| 66 | | 75.0 | 75.0 | 115.0 | 100.0 |
| 72 | | 75.0 | 75.0 | - | 100.0 |
| 78 | | - | 75.0 | - | 100.0 |
| 84 | | - | 75.0 | - | 100.0 |
| 36 | 120 | 75.0 | 75.0 | 115.0 | 100.0 |
| 42 | | 75.0 | 75.0 | 115.0 | 100.0 |
| 48 | | 75.0 | 75.0 | 115.0 | 100.0 |
| 54 | | 75.0 | 75.0 | 115.0 | 100.0 |
| 60 | | 75.0 | 75.0 | 115.0 | 100.0 |
| 66 | | 75.0 | 75.0 | - | 100.0 |
| 72 | | - | 75.0 | - | 100.0 |
| 78 | | - | 75.0 | - | 100.0 |
| 84 | | - | 75.0 | - | 100.0 |
| 36 | 132 | - | - | 100.0 | 100.0 |
| 42 | | - | - | 100.0 | 100.0 |
| 48 | | - | - | 100.0 | 100.0 |
| 54 | | - | - | 100.0 | 100.0 |
| 60 | | - | - | - | 100.0 |
| 66 | | - | - | - | 100.0 |
| 72 | | - | - | - | 100.0 |
| 78 | | - | - | - | 100.0 |

| DESIGN LOAD CAPACITY TABLE - PSF | | | | | |
|---|---|---|---|---|---|
| NOMINAL DIMS. | | | | | |
| WIDTH - W (IN.) | FRAME HEIGHT - H (IN.) | J1 | J2 | J3 | J4 |
| 36 | 144 | - | - | 100.0 | 100.0 |
| 42 | | - | - | 100.0 | 100.0 |
| 48 | | - | - | 100.0 | 100.0 |
| 54 | | - | - | - | 100.0 |
| 60 | | - | - | - | 100.0 |
| 66 | | - | - | - | 100.0 |
| 72 | | - | - | - | 100.0 |
| 36 | 156 | - | - | 100.0 | 100.0 |
| 42 | | - | - | 100.0 | 100.0 |
| 48 | | - | - | 100.0 | 100.0 |
| 54 | | - | - | - | 100.0 |
| 60 | | - | - | - | 100.0 |
| 66 | | - | - | - | 100.0 |
| 36 | 168 | - | - | - | 84.0 |
| 42 | | - | - | - | 84.0 |
| 48 | | - | - | - | 84.0 |
| 54 | | - | - | - | 84.0 |
| 60 | | - | - | - | 84.0 |
| 36 | 180 | - | - | - | 84.0 |
| 42 | | - | - | - | 84.0 |
| 48 | | - | - | - | 84.0 |
| 54 | | - | - | - | 84.0 |
| 60 | | - | - | - | 84.0 |

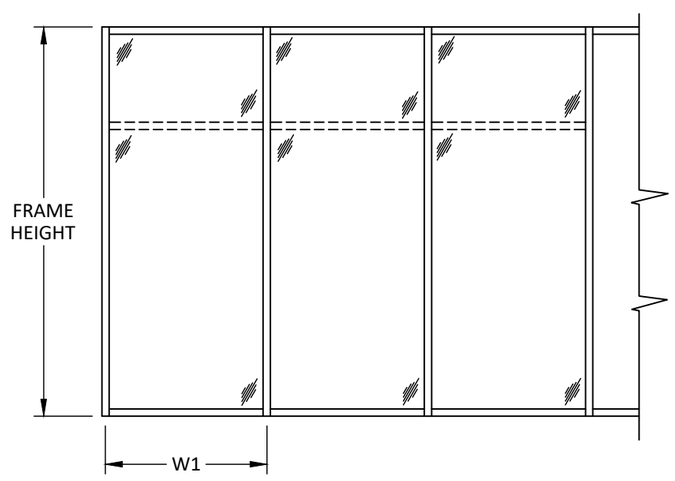


WIDTH (W) = W1

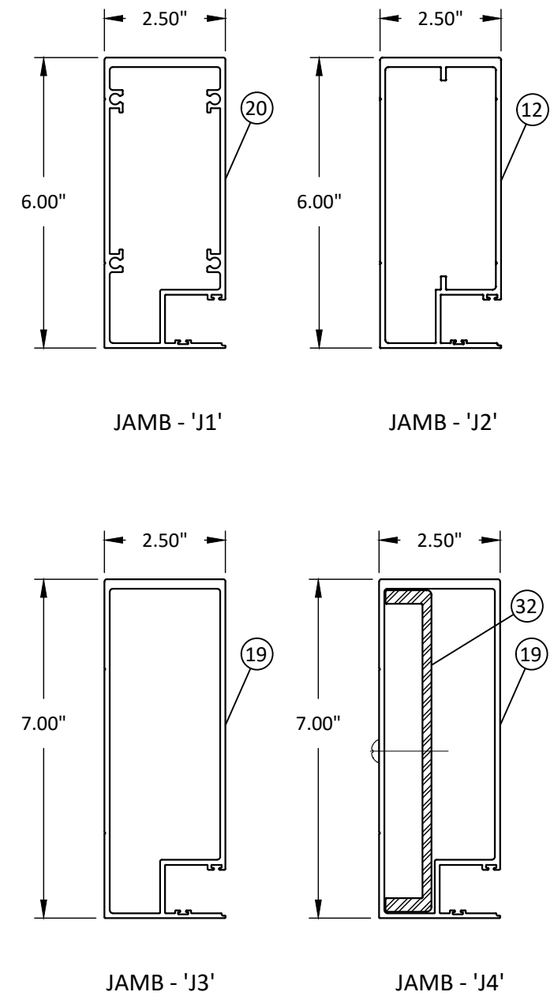



LINEA ROSSA WINDOWS & DOORS

1850 NW. 84TH AVE., STE. 114
DORAL, FL 33126
PH: (305)815-8797


TITLE: *GLR-U96 & GLR-U97 WINDOW WALL SYSTEMS - LMI (HVHZ)(IMPACT)*

JAMB DESIGN PRESSURE TABLES


PREPARED BY: BUILDING DROPS, INC.
398 E. DANIA BEACH BLVD., STE. 338
DANIA BEACH, FL 33004
PH: (954)399-8478
FAX: (954)744.4738
WEB: www.buildingdrops.com


| REMARKS | BY | DATE |
|---|---|---|
| | | |
| | | |
| | | |
| | | |
| | | |

THE INSTALLATION DETAILS DESCRIBED HEREIN ARE GENERIC AND MAY NOT REFLECT ACTUAL CONDITIONS FOR A SPECIFIC SITE. IF SITE CONDITIONS CAUSE INSTALLATION TO DEVIATE FROM THE REQUIREMENTS DETAILED HEREIN, A LICENSED ENGINEER OR ARCHITECT SHALL PREPARE SITE SPECIFIC DOCUMENTS FOR USE WITH THIS DOCUMENT.

HERMES F. NORERO
LICENSE
No. 73778
STATE OF
FLORIDA
PROFESSIONAL ENGINEER

HERMES F. NORERO
FL LICENSE NO. 73778
398 E. DANIA BEACH BLVD., STE. 338
DANIA BEACH, FL 33004
FBPE CERT. OF AUTHORIZATION NO. 29578

FL41922

DATE: 10.06.2023

DWG. BY: SH

CHK. BY: HFN

SCALE: NTS

DWG. #: LRA022

SHEET: 5 OF 16

# MULLION DESIGN PRESSURE TABLES

| DESIGN LOAD CAPACITY TABLE - PSF | | | | | | | | |
|---|---|---|---|---|---|---|---|---|
| NOMINAL DIMS. | | | | | | | | |
| WIDTH - W (IN.) | FRAME HEIGHT - H (IN.) | M1 | M2 | M3 | M4 | M5 | M6 | M7 |
| 36 | 96 | 75.0 | 75.0 | 75.0 | 140.0 | 115.0 | 100.0 | 100.0 |
| 42 | | 75.0 | 75.0 | 75.0 | 140.0 | 115.0 | 100.0 | 100.0 |
| 48 | | 75.0 | 75.0 | 75.0 | 140.0 | 115.0 | 100.0 | 100.0 |
| 54 | | 75.0 | 75.0 | 75.0 | 140.0 | 115.0 | 100.0 | 100.0 |
| 60 | | 75.0 | 75.0 | 75.0 | 140.0 | 115.0 | 100.0 | 100.0 |
| 66 | | - | 75.0 | 75.0 | 140.0 | 115.0 | 100.0 | 100.0 |
| 72 | | - | 75.0 | 75.0 | 140.0 | 115.0 | 100.0 | 100.0 |
| 78 | | - | - | 75.0 | 140.0 | - | 100.0 | 100.0 |
| 84 | | - | - | 75.0 | 140.0 | - | - | 100.0 |
| 36 | 108 | 75.0 | 75.0 | 75.0 | - | 115.0 | 100.0 | 100.0 |
| 42 | | 75.0 | 75.0 | 75.0 | - | 115.0 | 100.0 | 100.0 |
| 48 | | 75.0 | 75.0 | 75.0 | - | 115.0 | 100.0 | 100.0 |
| 54 | | 75.0 | 75.0 | 75.0 | - | 115.0 | 100.0 | 100.0 |
| 60 | | - | 75.0 | 75.0 | - | 115.0 | 100.0 | 100.0 |
| 66 | | - | 75.0 | 75.0 | - | 115.0 | 100.0 | 100.0 |
| 72 | | - | - | 75.0 | - | - | - | 100.0 |
| 78 | | - | - | 75.0 | - | - | - | 100.0 |
| 84 | | - | - | - | - | - | - | 100.0 |
| 36 | 120 | 75.0 | 75.0 | 75.0 | - | 115.0 | 100.0 | 100.0 |
| 42 | | 75.0 | 75.0 | 75.0 | - | 115.0 | 100.0 | 100.0 |
| 48 | | 75.0 | 75.0 | 75.0 | - | 115.0 | 100.0 | 100.0 |
| 54 | | - | 75.0 | 75.0 | - | 115.0 | 100.0 | 100.0 |
| 60 | | - | 75.0 | 75.0 | - | 115.0 | 100.0 | 100.0 |
| 66 | | - | - | 75.0 | - | - | - | 100.0 |
| 72 | | - | - | 75.0 | - | - | - | 100.0 |
| 78 | | - | - | - | - | - | - | 100.0 |
| 84 | | - | - | - | - | - | - | 100.0 |
| 36 | 132 | - | - | - | - | - | 100.0 | 100.0 |
| 42 | | - | - | - | - | - | 100.0 | 100.0 |
| 48 | | - | - | - | - | - | 100.0 | 100.0 |
| 54 | | - | - | - | - | - | 100.0 | 100.0 |
| 60 | | - | - | - | - | - | - | 100.0 |
| 66 | | - | - | - | - | - | - | 100.0 |
| 72 | | - | - | - | - | - | - | 100.0 |
| 78 | | - | - | - | - | - | - | 100.0 |

| DESIGN LOAD CAPACITY TABLE - PSF | | | | | | | | |
|---|---|---|---|---|---|---|---|---|
| NOMINAL DIMS. | | | | | | | | |
| WIDTH - W (IN.) | FRAME HEIGHT - H (IN.) | M1 | M2 | M3 | M4 | M5 | M6 | M7 |
| 36 | 144 | - | - | - | - | - | 100.0 | 100.0 |
| 42 | | - | - | - | - | - | 100.0 | 100.0 |
| 48 | | - | - | - | - | - | 100.0 | 100.0 |
| 54 | | - | - | - | - | - | - | 100.0 |
| 60 | | - | - | - | - | - | - | 100.0 |
| 66 | | - | - | - | - | - | - | 100.0 |
| 72 | | - | - | - | - | - | - | 100.0 |
| 36 | 156 | - | - | - | - | - | 100.0 | 100.0 |
| 42 | | - | - | - | - | - | 100.0 | 100.0 |
| 48 | | - | - | - | - | - | 100.0 | 100.0 |
| 54 | | - | - | - | - | - | - | 100.0 |
| 60 | | - | - | - | - | - | - | 100.0 |
| 66 | | - | - | - | - | - | - | 100.0 |
| 36 | 168 | - | - | - | - | - | - | 84.0 |
| 42 | | - | - | - | - | - | - | 84.0 |
| 48 | | - | - | - | - | - | - | 84.0 |
| 54 | | - | - | - | - | - | - | 84.0 |
| 60 | | - | - | - | - | - | - | 84.0 |
| 36 | 180 | - | - | - | - | - | - | 84.0 |
| 42 | | - | - | - | - | - | - | 84.0 |
| 48 | | - | - | - | - | - | - | 84.0 |
| 54 | | - | - | - | - | - | - | 84.0 |
| 60 | | - | - | - | - | - | - | 84.0 |

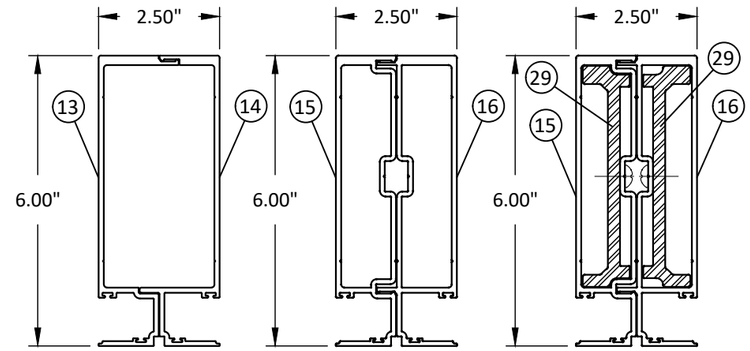


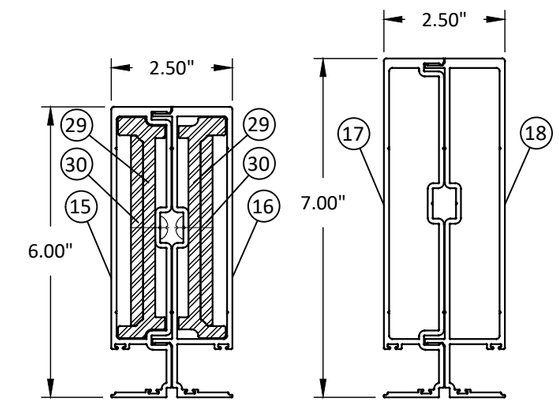


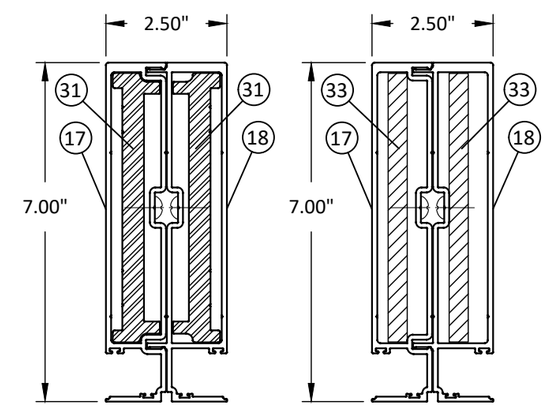


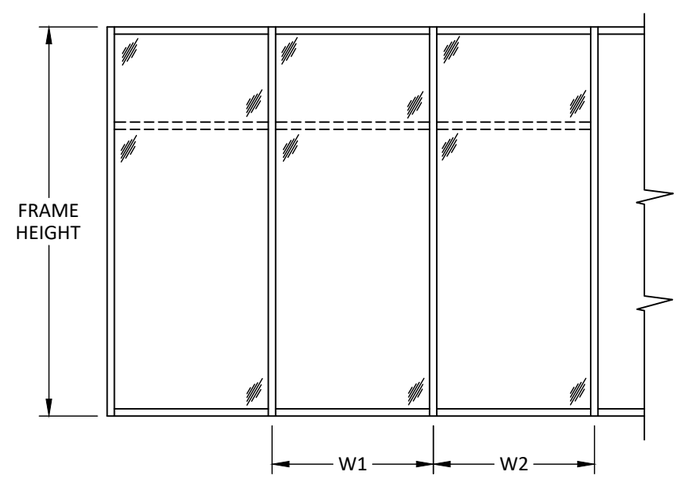


$$\text{WIDTH (W)} = \frac{W1 + W2}{2}$$


LINEA ROSSA WINDOWS & DOORS
1850 NW. 84TH AVE., STE. 114
DORAL, FL 33126
PH: (305)815-8797


TITLE: *GLR-U96 & GLR-U97 WINDOW WALL SYSTEMS - LMI (HVHZ)(IMPACT)*

MULLION DESIGN PRESSURE TABLES


PREPARED BY: BUILDING DROPS, INC.
398 E. DANIA BEACH BLVD., STE. 338
DANIA BEACH, FL 33004
PH: (954)399-8478
FAX: (954)744.4738
WEB: www.buildingdrops.com


| REMARKS | BY | DATE |
|---|---|---|
| | | |
| | | |
| | | |
| | | |


THE INSTALLATION DETAILS DESCRIBED HEREIN ARE GENERIC AND MAY NOT REFLECT ACTUAL CONDITIONS FOR A SPECIFIC SITE. IF SITE CONDITIONS CAUSE INSTALLATION TO DEVIATE FROM THE REQUIREMENTS DETAILED HEREIN, A LICENSED ENGINEER OR ARCHITECT SHALL PREPARE SITE SPECIFIC DOCUMENTS FOR USE WITH THIS DOCUMENT.


HERMES F. NORERO LICENSE No. 73778 STATE OF FLORIDA PROFESSIONAL ENGINEER

HERMES F. NORERO, P.E.
FL LICENSE NO. 73778
398 E. DANIA BEACH BLVD., STE. 338
DANIA BEACH, FL 33004
FBPE CERT. OF AUTHORIZATION NO. 29578

FL41922

DATE: 10.06.2023

DWG. BY: SH | CHK. BY: HFN

SCALE: NTS

DWG. #: LRA022

SHEET: 6 OF 16

# CORNER MULLION DESIGN PRESSURE TABLES

| DESIGN LOAD CAPACITY TABLE - PSF | | | |
|---|---|---|---|
| NOMINAL DIMS. | | C1 | C2 |
| WIDTH - W (IN.) | FRAME HEIGHT - H (IN.) | | |
| 36 | 96 | 84.0 | 84.0 |
| 42 | | 84.0 | 84.0 |
| 48 | | 84.0 | 84.0 |
| 54 | | 84.0 | 84.0 |
| 60 | | 84.0 | 84.0 |
| 66 | | 84.0 | 84.0 |
| 72 | | 84.0 | 84.0 |
| 78 | | 84.0 | 84.0 |
| 84 | | 84.0 | 84.0 |
| 36 | 108 | 84.0 | 84.0 |
| 42 | | 84.0 | 84.0 |
| 48 | | 84.0 | 84.0 |
| 54 | | 84.0 | 84.0 |
| 60 | | 84.0 | 84.0 |
| 66 | | 84.0 | 84.0 |
| 72 | | 84.0 | 84.0 |
| 78 | | 84.0 | 84.0 |
| 84 | | 84.0 | 84.0 |
| 36 | 120 | 84.0 | 84.0 |
| 42 | | 84.0 | 84.0 |
| 48 | | 84.0 | 84.0 |
| 54 | | 84.0 | 84.0 |
| 60 | | 84.0 | 84.0 |
| 66 | | 84.0 | 84.0 |
| 72 | | 84.0 | 84.0 |
| 78 | | 84.0 | 84.0 |
| 84 | | 84.0 | 84.0 |
| 36 | 132 | 84.0 | 84.0 |
| 42 | | 84.0 | 84.0 |
| 48 | | 84.0 | 84.0 |
| 54 | | 84.0 | 84.0 |
| 60 | | 84.0 | 84.0 |
| 66 | | 84.0 | 84.0 |
| 72 | | 84.0 | 84.0 |
| 78 | | 84.0 | 84.0 |

| DESIGN LOAD CAPACITY TABLE - PSF | | | |
|---|---|---|---|
| NOMINAL DIMS. | | C1 | C2 |
| WIDTH - W (IN.) | FRAME HEIGHT - H (IN.) | | |
| 36 | 144 | 84.0 | 84.0 |
| 42 | | 84.0 | 84.0 |
| 48 | | 84.0 | 84.0 |
| 54 | | 84.0 | 84.0 |
| 60 | | 84.0 | 84.0 |
| 66 | | 84.0 | 84.0 |
| 72 | | 84.0 | 84.0 |
| 36 | 156 | 84.0 | 84.0 |
| 42 | | 84.0 | 84.0 |
| 48 | | 84.0 | 84.0 |
| 54 | | 84.0 | 84.0 |
| 60 | | 84.0 | 84.0 |
| 66 | | 84.0 | 84.0 |
| 36 | 168 | 84.0 | 84.0 |
| 42 | | 84.0 | 84.0 |
| 48 | | 84.0 | 84.0 |
| 54 | | 84.0 | 84.0 |
| 60 | | 84.0 | 84.0 |
| 36 | 180 | 84.0 | 84.0 |
| 42 | | 84.0 | 84.0 |
| 48 | | 84.0 | 84.0 |
| 54 | | 84.0 | 84.0 |
| 60 | | 84.0 | 84.0 |

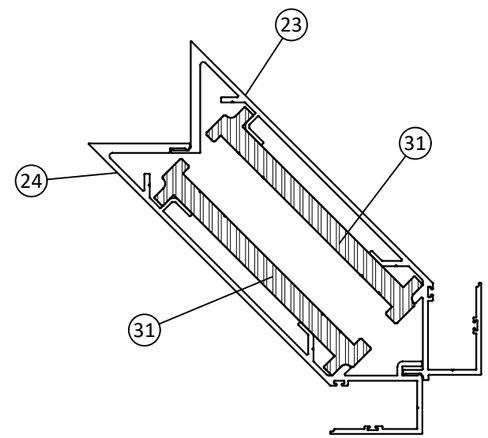


CORNER MULLION - 'C1'

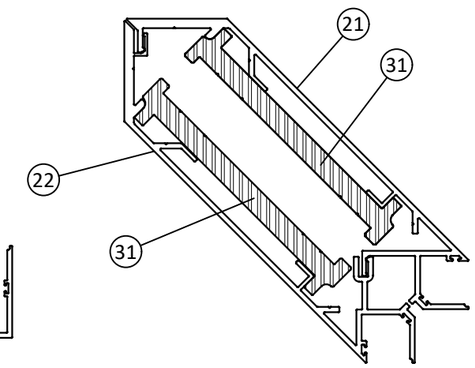


CORNER MULLION - 'C2'

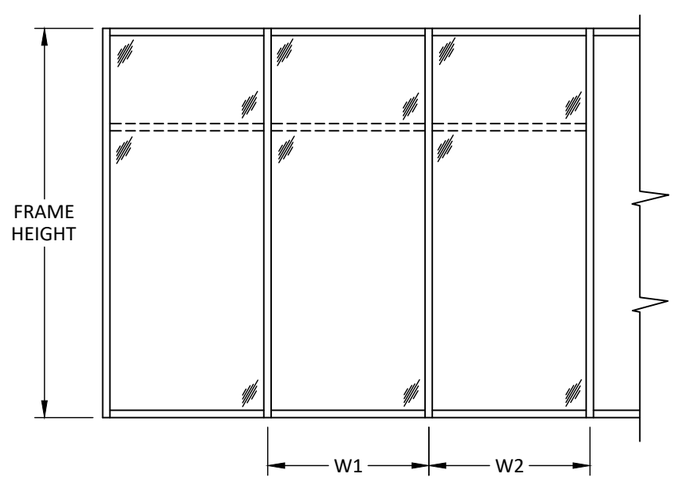


$$\text{WIDTH (W)} = \frac{W1 + W2}{2}$$


LINEA ROSSA WINDOWS & DOORS
1850 NW. 84TH AVE., STE. 114
DORAL, FL 33126
PH: (305)815-8797


TITLE: *GLR-U96 & GLR-U97 WINDOW WALL SYSTEMS - LMI (HVHZ)(IMPACT)*

CORNER MULLION DESIGN PRESSURE TABLES


PREPARED BY: BUILDING DROPS, INC.
398 E. DANIA BEACH BLVD., STE. 338
DANIA BEACH, FL 33004
PH: (954)399-8478
FAX: (954)744.4738
WEB: www.buildingdrops.com


| REMARKS | BY | DATE |
|---|---|---|
| | | |
| | | |
| | | |
| | | |


THE INSTALLATION DETAILS DESCRIBED HEREIN ARE GENERIC AND MAY NOT REFLECT ACTUAL CONDITIONS FOR A SPECIFIC SITE. IF SITE CONDITIONS CAUSE INSTALLATION TO DEVIATE FROM THE REQUIREMENTS DETAILED HEREIN, A LICENSED ENGINEER OR ARCHITECT SHALL PREPARE SITE SPECIFIC DOCUMENTS FOR USE WITH THIS DOCUMENT.


HERMES F. NORERO LICENSE No. 73778 STATE OF FLORIDA PROFESSIONAL ENGINEER
HERMES F. NORERO, P.E.
LICENSE NO. 73778
398 E. DANIA BEACH BLVD., STE. 338
DANIA BEACH, FL 33004
FBPE CERT. OF AUTHORIZATION NO. 29578

FL41922

DATE: 10.06.2023

DWG. BY: SH | CHK. BY: HFN

SCALE: NTS

DWG. #: LRA022

SHEET: 7 OF 16

# TYPE A & B ANCHOR TABLES

| ANCHOR LOAD CAPACITY (PSF) EXT. (+) & INT (-) | | | | | | | | | |
|---|---|---|---|---|---|---|---|---|---|
| NOMINAL DIMS. (IN.) | | ANCHOR TYPE 'A' | | | ANCHOR TYPE 'B' | | | | |
| TRIBUTARY WIDTH | FRAME HEIGHT | A2 | A3 | A4 | B2 | B3 | B4 | B5 | B6 |
| 36 | 96 | 140.0 | 140.0 | 140.0 | 100.0 | 140.0 | 140.0 | 140.0 | 140.0 |
| 42 | | 140.0 | 140.0 | 140.0 | 85.7 | 128.6 | 140.0 | 140.0 | 140.0 |
| 48 | | 136.8 | 140.0 | 140.0 | 75.0 | 112.5 | 140.0 | 140.0 | 140.0 |
| 54 | | 121.6 | 140.0 | 140.0 | 66.7 | 100.0 | 133.3 | 140.0 | 140.0 |
| 60 | | 109.4 | 140.0 | 140.0 | 60.0 | 90.0 | 120.0 | 140.0 | 140.0 |
| 66 | | 99.5 | 140.0 | 140.0 | 54.5 | 81.8 | 109.1 | 136.4 | 140.0 |
| 72 | | 91.2 | 136.8 | 140.0 | 50.0 | 75.0 | 100.0 | 125.0 | 140.0 |
| 78 | | 84.2 | 126.2 | 140.0 | 46.2 | 69.2 | 92.3 | 115.4 | 138.5 |
| 84 | | 78.1 | 117.2 | 140.0 | 42.9 | 64.3 | 85.7 | 107.1 | 128.6 |
| 36 | 108 | 140.0 | 140.0 | 140.0 | 88.9 | 133.3 | 140.0 | 140.0 | 140.0 |
| 42 | | 138.9 | 140.0 | 140.0 | 76.2 | 114.3 | 140.0 | 140.0 | 140.0 |
| 48 | | 121.6 | 140.0 | 140.0 | 66.7 | 100.0 | 133.3 | 140.0 | 140.0 |
| 54 | | 108.0 | 140.0 | 140.0 | 59.3 | 88.9 | 118.5 | 140.0 | 140.0 |
| 60 | | 97.2 | 140.0 | 140.0 | 53.3 | 80.0 | 106.7 | 133.3 | 140.0 |
| 66 | | 88.4 | 132.6 | 140.0 | 48.5 | 72.7 | 97.0 | 121.2 | 140.0 |
| 72 | | 81.0 | 121.6 | 140.0 | 44.4 | 66.7 | 88.9 | 111.1 | 133.3 |
| 78 | | 74.8 | 112.2 | 140.0 | 41.0 | 61.5 | 82.1 | 102.6 | 123.1 |
| 84 | | 69.5 | 104.2 | 138.9 | 38.1 | 57.1 | 76.2 | 95.2 | 114.3 |
| 36 | 120 | 140.0 | 140.0 | 140.0 | 80.0 | 120.0 | 140.0 | 140.0 | 140.0 |
| 42 | | 125.0 | 140.0 | 140.0 | 68.6 | 102.9 | 137.1 | 140.0 | 140.0 |
| 48 | | 109.4 | 140.0 | 140.0 | 60.0 | 90.0 | 120.0 | 140.0 | 140.0 |
| 54 | | 97.2 | 140.0 | 140.0 | 53.3 | 80.0 | 106.7 | 133.3 | 140.0 |
| 60 | | 87.5 | 131.3 | 140.0 | 48.0 | 72.0 | 96.0 | 120.0 | 140.0 |
| 66 | | 79.6 | 119.3 | 140.0 | 43.6 | 65.5 | 87.3 | 109.1 | 130.9 |
| 72 | | 72.9 | 109.4 | 140.0 | 40.0 | 60.0 | 80.0 | 100.0 | 120.0 |
| 78 | | 67.3 | 101.0 | 134.6 | 36.9 | 55.4 | 73.8 | 92.3 | 110.8 |
| 84 | | 62.5 | 93.8 | 125.0 | 34.3 | 51.4 | 68.6 | 85.7 | 102.9 |
| 36 | 132 | 132.6 | 140.0 | 140.0 | 72.7 | 109.1 | 140.0 | 140.0 | 140.0 |
| 42 | | 113.7 | 140.0 | 140.0 | 62.3 | 93.5 | 124.7 | 140.0 | 140.0 |
| 48 | | 99.5 | 140.0 | 140.0 | 54.5 | 81.8 | 109.1 | 136.4 | 140.0 |
| 54 | | 88.4 | 132.6 | 140.0 | 48.5 | 72.7 | 97.0 | 121.2 | 140.0 |
| 60 | | 79.6 | 119.3 | 140.0 | 43.6 | 65.5 | 87.3 | 109.1 | 130.9 |
| 66 | | 72.3 | 108.5 | 140.0 | 39.7 | 59.5 | 79.3 | 99.2 | 119.0 |
| 72 | | 66.3 | 99.5 | 132.6 | 36.4 | 54.5 | 72.7 | 90.9 | 109.1 |
| 78 | | 61.2 | 91.8 | 122.4 | 33.6 | 50.3 | 67.1 | 83.9 | 100.7 |

| ANCHOR LOAD CAPACITY (PSF) EXT. (+) & INT (-) | | | | | | | | | |
|---|---|---|---|---|---|---|---|---|---|
| NOMINAL DIMS. (IN.) | | ANCHOR TYPE 'A' | | | ANCHOR TYPE 'B' | | | | |
| TRIBUTARY WIDTH | FRAME HEIGHT | A2 | A3 | A4 | B2 | B3 | B4 | B5 | B6 |
| 36 | 144 | 121.6 | 140.0 | 140.0 | 66.7 | 100.0 | 133.3 | 140.0 | 140.0 |
| 42 | | 104.2 | 140.0 | 140.0 | 57.1 | 85.7 | 114.3 | 140.0 | 140.0 |
| 48 | | 91.2 | 136.8 | 140.0 | 50.0 | 75.0 | 100.0 | 125.0 | 140.0 |
| 54 | | 81.0 | 121.6 | 140.0 | 44.4 | 66.7 | 88.9 | 111.1 | 133.3 |
| 60 | | 72.9 | 109.4 | 140.0 | 40.0 | 60.0 | 80.0 | 100.0 | 120.0 |
| 66 | | 66.3 | 99.5 | 132.6 | 36.4 | 54.5 | 72.7 | 90.9 | 109.1 |
| 72 | | 60.8 | 91.2 | 121.6 | 33.3 | 50.0 | 66.7 | 83.3 | 100.0 |
| 36 | 156 | 112.2 | 140.0 | 140.0 | 61.5 | 92.3 | 123.1 | 140.0 | 140.0 |
| 42 | | 96.2 | 140.0 | 140.0 | 52.7 | 79.1 | 105.5 | 131.9 | 140.0 |
| 48 | | 84.2 | 126.2 | 140.0 | 46.2 | 69.2 | 92.3 | 115.4 | 138.5 |
| 54 | | 74.8 | 112.2 | 140.0 | 41.0 | 61.5 | 82.1 | 102.6 | 123.1 |
| 60 | | 67.3 | 101.0 | 134.6 | 36.9 | 55.4 | 73.8 | 92.3 | 110.8 |
| 66 | | 61.2 | 91.8 | 122.4 | 33.6 | 50.3 | 67.1 | 83.9 | 100.7 |
| 36 | 168 | 104.2 | 140.0 | 140.0 | 57.1 | 85.7 | 114.3 | 140.0 | 140.0 |
| 42 | | 89.3 | 134.0 | 140.0 | 49.0 | 73.5 | 98.0 | 122.4 | 140.0 |
| 48 | | 78.1 | 117.2 | 140.0 | 42.9 | 64.3 | 85.7 | 107.1 | 128.6 |
| 54 | | 69.5 | 104.2 | 138.9 | 38.1 | 57.1 | 76.2 | 95.2 | 114.3 |
| 60 | | 62.5 | 93.8 | 125.0 | 34.3 | 51.4 | 68.6 | 85.7 | 102.9 |
| 36 | 180 | 97.2 | 140.0 | 140.0 | 53.3 | 80.0 | 106.7 | 133.3 | 140.0 |
| 42 | | 83.4 | 125.0 | 140.0 | 45.7 | 68.6 | 91.4 | 114.3 | 137.1 |
| 48 | | 72.9 | 109.4 | 140.0 | 40.0 | 60.0 | 80.0 | 100.0 | 120.0 |
| 54 | | 64.8 | 97.2 | 129.7 | 35.6 | 53.3 | 71.1 | 88.9 | 106.7 |
| 60 | | 58.3 | 87.5 | 116.7 | 32.0 | 48.0 | 64.0 | 80.0 | 96.0 |

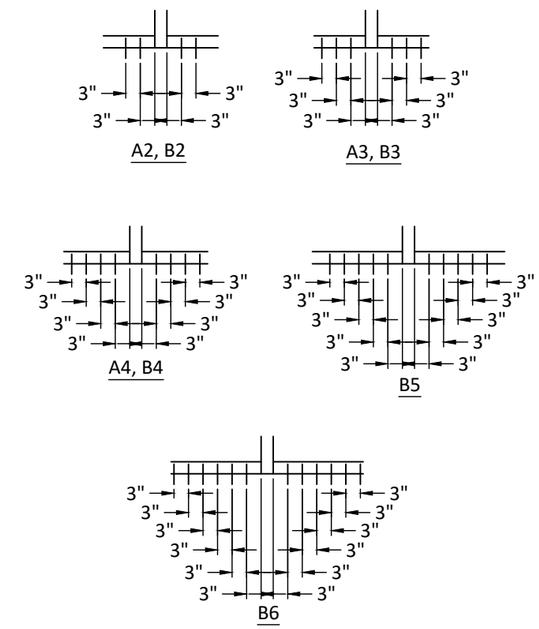


| ANCHOR SCHEDULE | | | | |
|---|---|---|---|---|
| ANCHOR TYPE | ANCHOR DESCRIPTION | SUBSTRATE REQUIREMENTS | MIN. EMBEDMENT | MIN. EDGE DISTANCE |
| A | 5/16" DEWALT ULTRACON + | CONCRETE MIN. F'C = 3000 PSI | 2" | 3" |
| B | | GROUT-FILLED BLOCK PER C-90, MIN. F'C' = 2000 PSI | 1-3/4" | 2-1/2" |
| C | | WOOD, MIN. S.G. = 0.55 | 1-1/2" | 1-9/16" |
| D | 5/16" SELF-DRILLING SCREW (GRADE 5) | STEEL: MIN. 16 GA., MIN. Fy=36 KSI, ALUM: MIN. 1/8", MIN. 6063-T5 | 3 THREADS PENETRATION PAST METAL STRUCTURE | 3/4" |


LINEA ROSSA WINDOWS & DOORS
1850 NW. 84TH AVE., STE. 114
DORAL, FL 33126
PH: (305)815-8797


TITLE: *GLR-U96 & GLR-U97 WINDOW WALL SYSTEMS - LMI (HVHZ)(IMPACT)*
TYPE A & B ANCHOR TABLES


PREPARED BY: BUILDING DROPS, INC.
398 E. DANIA BEACH BLVD., STE. 338
DANIA BEACH, FL 33004
PH: (954)399-8478
FAX: (954)744.4738
WEB: www.buildingdrops.com


| REMARKS | BY | DATE |
|---|---|---|
| | | |
| | | |
| | | |
| | | |


THE INSTALLATION DETAILS DESCRIBED HEREIN ARE GENERIC AND MAY NOT REFLECT ACTUAL CONDITIONS FOR A SPECIFIC SITE. IF SITE CONDITIONS CAUSE INSTALLATION TO DEVIATE FROM THE REQUIREMENTS DETAILED HEREIN, A LICENSED ENGINEER OR ARCHITECT SHALL PREPARE SITE SPECIFIC DOCUMENTS FOR USE WITH THIS DOCUMENT.


HERMES F. NORERO LICENSE No. 73778 STATE OF FLORIDA PROFESSIONAL ENGINEER
HERMES F. NORERO
FLORIDA LICENSE NO. 73778
398 E. DANIA BEACH BLVD., STE. 338
DANIA BEACH, FL 33004
FBPE CERT. OF AUTHORIZATION NO. 29578

FL41922

DATE: 10.06.2023
DWG. BY: SH
CHK. BY: HFN
SCALE: NTS
DWG. #: LRA022
SHEET: 8 OF 16

# TYPE C & D ANCHOR TABLES

| ANCHOR LOAD CAPACITY (PSF) EXT. (+) & INT (-) | | | | | | | | | |
|---|---|---|---|---|---|---|---|---|---|
| NOMINAL DIMS. (IN.) | | ANCHOR TYPE 'C' | | | | ANCHOR TYPE 'D' | | | |
| TRIBUTARY WIDTH | FRAME HEIGHT | C2 | C3 | C4 | C5 | D2 | D3 | D4 | D5 |
| 36 | 96 | 127.8 | 140.0 | 140.0 | 140.0 | 140.0 | 140.0 | 140.0 | 140.0 |
| 42 | | 109.5 | 140.0 | 140.0 | 140.0 | 131.0 | 140.0 | 140.0 | 140.0 |
| 48 | | 95.8 | 140.0 | 140.0 | 140.0 | 114.6 | 140.0 | 140.0 | 140.0 |
| 54 | | 85.2 | 127.8 | 140.0 | 140.0 | 101.9 | 140.0 | 140.0 | 140.0 |
| 60 | | 76.7 | 115.0 | 140.0 | 140.0 | 91.7 | 137.5 | 140.0 | 140.0 |
| 66 | | 69.7 | 104.5 | 139.4 | 140.0 | 83.3 | 125.0 | 140.0 | 140.0 |
| 72 | | 63.9 | 95.8 | 127.8 | 140.0 | 76.4 | 114.6 | 140.0 | 140.0 |
| 78 | | 59.0 | 88.5 | 117.9 | 140.0 | 70.5 | 105.8 | 140.0 | 140.0 |
| 84 | | 54.8 | 82.1 | 109.5 | 136.9 | 65.5 | 98.2 | 131.0 | 140.0 |
| 36 | 108 | 113.6 | 140.0 | 140.0 | 140.0 | 135.8 | 140.0 | 140.0 | 140.0 |
| 42 | | 97.4 | 140.0 | 140.0 | 140.0 | 116.4 | 140.0 | 140.0 | 140.0 |
| 48 | | 85.2 | 127.8 | 140.0 | 140.0 | 101.9 | 140.0 | 140.0 | 140.0 |
| 54 | | 75.7 | 113.6 | 140.0 | 140.0 | 90.5 | 135.8 | 140.0 | 140.0 |
| 60 | | 68.1 | 102.2 | 136.3 | 140.0 | 81.5 | 122.2 | 140.0 | 140.0 |
| 66 | | 62.0 | 92.9 | 123.9 | 140.0 | 74.1 | 111.1 | 140.0 | 140.0 |
| 72 | | 56.8 | 85.2 | 113.6 | 140.0 | 67.9 | 101.9 | 135.8 | 140.0 |
| 78 | | 52.4 | 78.6 | 104.8 | 131.1 | 62.7 | 94.0 | 125.4 | 140.0 |
| 84 | | 48.7 | 73.0 | 97.4 | 121.7 | 58.2 | 87.3 | 116.4 | 140.0 |
| 36 | 120 | 102.2 | 140.0 | 140.0 | 140.0 | 122.2 | 140.0 | 140.0 | 140.0 |
| 42 | | 87.6 | 131.4 | 140.0 | 140.0 | 104.8 | 140.0 | 140.0 | 140.0 |
| 48 | | 76.7 | 115.0 | 140.0 | 140.0 | 91.7 | 137.5 | 140.0 | 140.0 |
| 54 | | 68.1 | 102.2 | 136.3 | 140.0 | 81.5 | 122.2 | 140.0 | 140.0 |
| 60 | | 61.3 | 92.0 | 122.7 | 140.0 | 73.3 | 110.0 | 140.0 | 140.0 |
| 66 | | 55.8 | 83.6 | 111.5 | 139.4 | 66.7 | 100.0 | 133.3 | 140.0 |
| 72 | | 51.1 | 76.7 | 102.2 | 127.8 | 61.1 | 91.7 | 122.2 | 140.0 |
| 78 | | 47.2 | 70.8 | 94.4 | 117.9 | 56.4 | 84.6 | 112.8 | 140.0 |
| 84 | | 43.8 | 65.7 | 87.6 | 109.5 | 52.4 | 78.6 | 104.8 | 131.0 |
| 36 | 132 | 92.9 | 139.4 | 140.0 | 140.0 | 111.1 | 140.0 | 140.0 | 140.0 |
| 42 | | 79.7 | 119.5 | 140.0 | 140.0 | 95.2 | 140.0 | 140.0 | 140.0 |
| 48 | | 69.7 | 104.5 | 139.4 | 140.0 | 83.3 | 125.0 | 140.0 | 140.0 |
| 54 | | 62.0 | 92.9 | 123.9 | 140.0 | 74.1 | 111.1 | 140.0 | 140.0 |
| 60 | | 55.8 | 83.6 | 111.5 | 139.4 | 66.7 | 100.0 | 133.3 | 140.0 |
| 66 | | 50.7 | 76.0 | 101.4 | 126.7 | 60.6 | 90.9 | 121.2 | 140.0 |
| 72 | | 46.5 | 69.7 | 92.9 | 116.2 | 55.6 | 83.3 | 111.1 | 138.9 |
| 78 | | 42.9 | 64.3 | 85.8 | 107.2 | 51.3 | 76.9 | 102.6 | 128.2 |

| ANCHOR LOAD CAPACITY (PSF) EXT. (+) & INT (-) | | | | | | | | | |
|---|---|---|---|---|---|---|---|---|---|
| NOMINAL DIMS. (IN.) | | ANCHOR TYPE 'C' | | | | ANCHOR TYPE 'D' | | | |
| TRIBUTARY WIDTH | FRAME HEIGHT | C2 | C3 | C4 | C5 | D2 | D3 | D4 | D5 |
| 36 | 144 | 85.2 | 127.8 | 140.0 | 140.0 | 101.9 | 140.0 | 140.0 | 140.0 |
| 42 | | 73.0 | 109.5 | 140.0 | 140.0 | 87.3 | 131.0 | 140.0 | 140.0 |
| 48 | | 63.9 | 95.8 | 127.8 | 140.0 | 76.4 | 114.6 | 140.0 | 140.0 |
| 54 | | 56.8 | 85.2 | 113.6 | 140.0 | 67.9 | 101.9 | 135.8 | 140.0 |
| 60 | | 51.1 | 76.7 | 102.2 | 127.8 | 61.1 | 91.7 | 122.2 | 140.0 |
| 66 | | 46.5 | 69.7 | 92.9 | 116.2 | 55.6 | 83.3 | 111.1 | 138.9 |
| 72 | | 42.6 | 63.9 | 85.2 | 106.5 | 50.9 | 76.4 | 101.9 | 127.3 |
| 36 | 156 | 78.6 | 117.9 | 140.0 | 140.0 | 94.0 | 140.0 | 140.0 | 140.0 |
| 42 | | 67.4 | 101.1 | 134.8 | 140.0 | 80.6 | 120.9 | 140.0 | 140.0 |
| 48 | | 59.0 | 88.5 | 117.9 | 140.0 | 70.5 | 105.8 | 140.0 | 140.0 |
| 54 | | 52.4 | 78.6 | 104.8 | 131.1 | 62.7 | 94.0 | 125.4 | 140.0 |
| 60 | | 47.2 | 70.8 | 94.4 | 117.9 | 56.4 | 84.6 | 112.8 | 140.0 |
| 66 | | 42.9 | 64.3 | 85.8 | 107.2 | 51.3 | 76.9 | 102.6 | 128.2 |
| 36 | 168 | 73.0 | 109.5 | 140.0 | 140.0 | 87.3 | 131.0 | 140.0 | 140.0 |
| 42 | | 62.6 | 93.9 | 125.2 | 140.0 | 74.8 | 112.2 | 140.0 | 140.0 |
| 48 | | 54.8 | 82.1 | 109.5 | 136.9 | 65.5 | 98.2 | 131.0 | 140.0 |
| 54 | | 48.7 | 73.0 | 97.4 | 121.7 | 58.2 | 87.3 | 116.4 | 140.0 |
| 60 | | 43.8 | 65.7 | 87.6 | 109.5 | 52.4 | 78.6 | 104.8 | 131.0 |
| 36 | 180 | 68.1 | 102.2 | 136.3 | 140.0 | 81.5 | 122.2 | 140.0 | 140.0 |
| 42 | | 58.4 | 87.6 | 116.8 | 140.0 | 69.8 | 104.8 | 139.7 | 140.0 |
| 48 | | 51.1 | 76.7 | 102.2 | 127.8 | 61.1 | 91.7 | 122.2 | 140.0 |
| 54 | | 45.4 | 68.1 | 90.9 | 113.6 | 54.3 | 81.5 | 108.6 | 135.8 |
| 60 | | 40.9 | 61.3 | 81.8 | 102.2 | 48.9 | 73.3 | 97.8 | 122.2 |

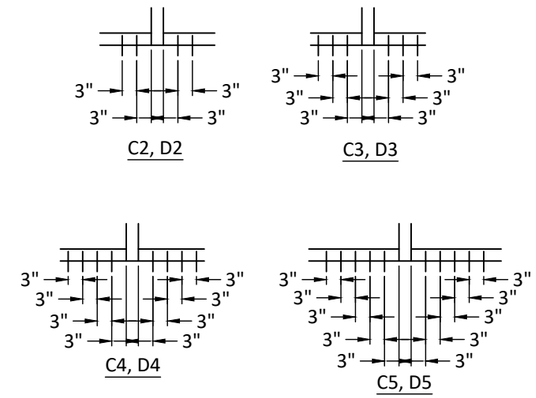


| ANCHOR SCHEDULE | | | | |
|---|---|---|---|---|
| ANCHOR TYPE | ANCHOR DESCRIPTION | SUBSTRATE REQUIREMENTS | MIN. EMBEDMENT | MIN. EDGE DISTANCE |
| A | 5/16" DEWALT ULTRACON + | CONCRETE MIN. F'C = 3000 PSI | 2" | 3" |
| B | | GROUT-FILLED BLOCK PER C-90, MIN. F'C' = 2000 PSI | 1-3/4" | 2-1/2" |
| C | | WOOD, MIN. S.G. = 0.55 | 1-1/2" | 1-9/16" |
| D | 5/16" SELF-DRILLING SCREW (GRADE 5) | STEEL: MIN. 16 GA., MIN. Fy=36 KSI, ALUM: MIN. 1/8", MIN. 6063-T5 | 3 THREADS PENETRATION PAST METAL STRUCTURE | 3/4" |


LINEA ROSSA WINDOWS & DOORS
1850 NW. 84TH AVE., STE. 114
DORAL, FL 33126
PH: (305)815-8797


TITLE: *GLR-U96 & GLR-U97 WINDOW WALL SYSTEMS - LMI (HVHZ)(IMPACT)*
TYPE C & D ANCHOR TABLES


PREPARED BY: BUILDING DROPS, INC.
398 E. DANIA BEACH BLVD., STE. 338
DANIA BEACH, FL 33004
PH: (954)399-8478
FAX: (954)744.4738
WEB: www.buildingdrops.com


| REMARKS | BY | DATE |
|---|---|---|
| | | |
| | | |
| | | |
| | | |


THE INSTALLATION DETAILS DESCRIBED HEREIN ARE GENERIC AND MAY NOT REFLECT ACTUAL CONDITIONS FOR A SPECIFIC SITE. IF SITE CONDITIONS CAUSE INSTALLATION TO DEVIATE FROM THE REQUIREMENTS DETAILED HEREIN, A LICENSED ENGINEER OR ARCHITECT SHALL PREPARE SITE SPECIFIC DOCUMENTS FOR USE WITH THIS DOCUMENT.


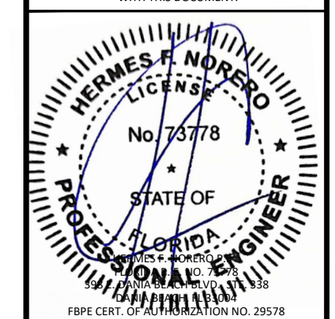


FL41922

DATE: 10.06.2023
DWG. BY: SH
CHK. BY: HFN
SCALE: NTS
DWG. #: LRA022
SHEET: 9 OF 16

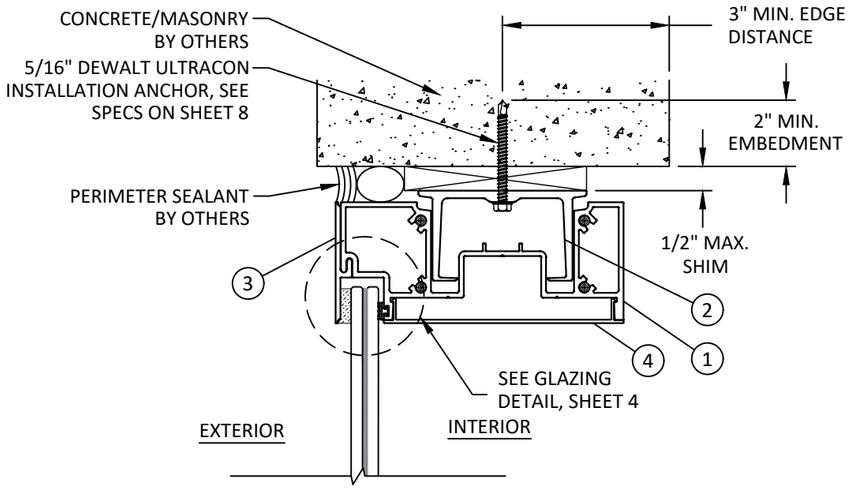


A 10 VERTICAL SECTION

HEAD - CONCRETE/MASONRY SUBSTRATE

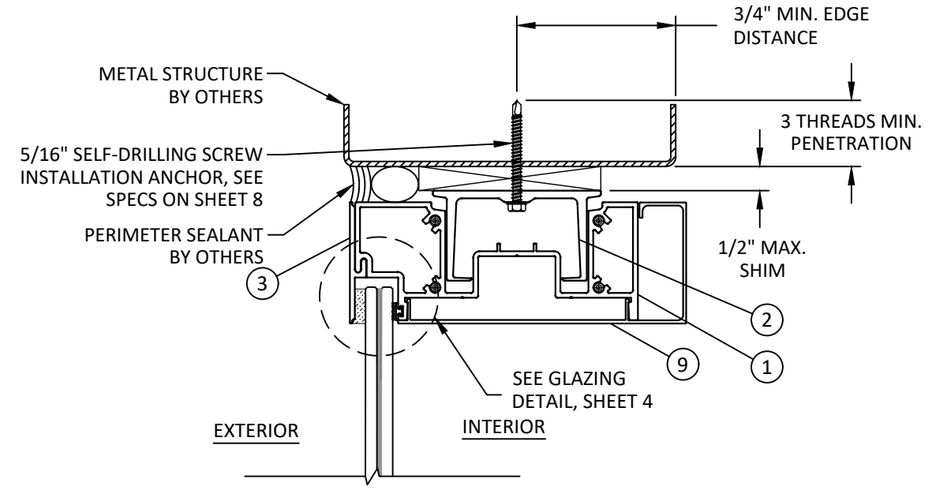


B 10 VERTICAL SECTION

HEAD - METAL SUBSTRATE

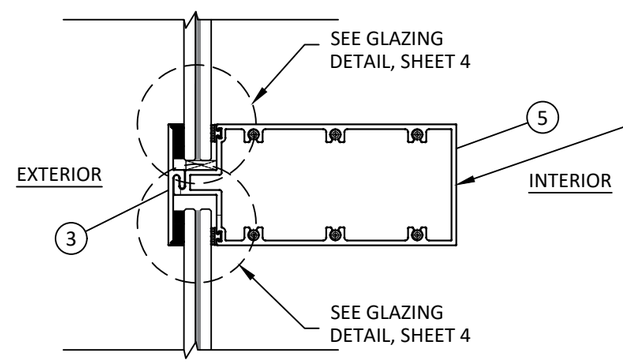


C 10 VERTICAL SECTION

HORIZONTAL MULLION

| DESIGN LOAD CAPACITY TABLE - PSF | | |
|---|---|---|
| NOMINAL DIMS. | | H1 |
| TRIBUTARY WIDTH (IN.) | MULLION SPAN (IN.) | |
| 84 | 39.5 | 115.0 |
| 60 | 51.5 | 115.0 |
| 120 | | 100.0 |
| 108 | 63.5 | 100.0 |
| 96 | 75.5 | 100.0 |
| 84 | 87.5 | 100.0 |
| 72 | 97.5 | 100.0 |

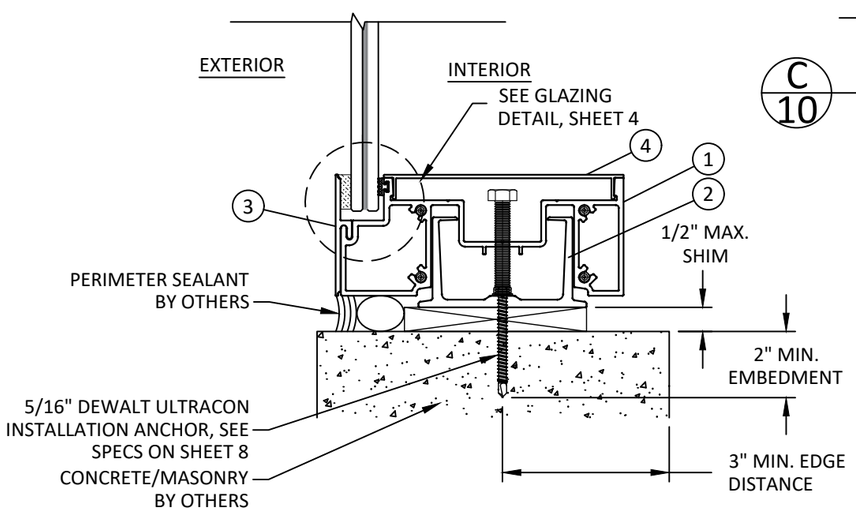


D 10 VERTICAL SECTION

SILL - CONCRETE/MASONRY SUBSTRATE

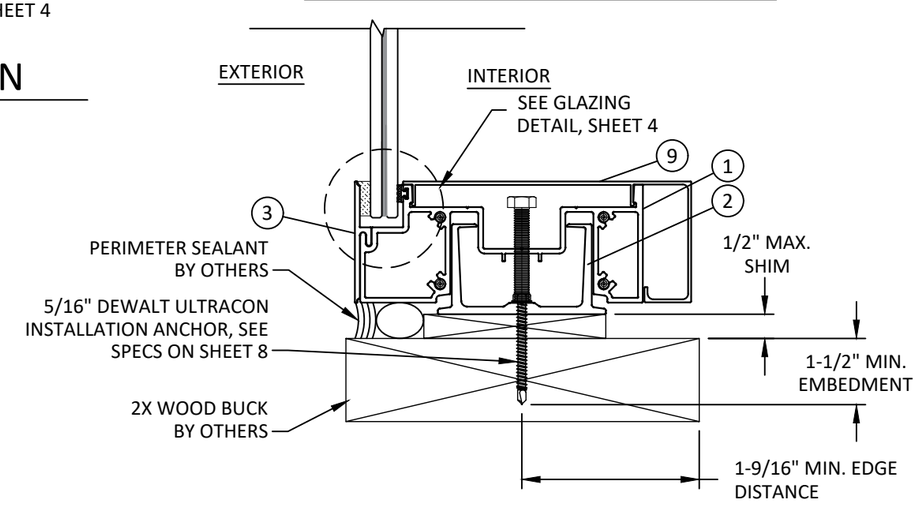


E 10 VERTICAL SECTION

HEAD - 2X WOOD BUCK


LINEA ROSSA WINDOWS & DOORS

1850 NW. 84TH AVE., STE. 114
DORAL, FL 33126
PH: (305)815-8797


TITLE: *GLR-U96 & GLR-U97 WINDOW WALL SYSTEMS - LMI (HVHZ)(IMPACT)* VERTICAL SECTIONS


PREPARED BY: BUILDING DROPS, INC.
398 E. DANIA BEACH BLVD., STE. 338
DANIA BEACH, FL 33004
PH: (954)399-8478
FAX: (954)744.4738
WEB: www.buildingdrops.com


| REMARKS | BY | DATE |
|---|---|---|
| | | |
| | | |
| | | |
| | | |


THE INSTALLATION DETAILS DESCRIBED HEREIN ARE GENERIC AND MAY NOT REFLECT ACTUAL CONDITIONS FOR A SPECIFIC SITE. IF SITE CONDITIONS CAUSE INSTALLATION TO DEVIATE FROM THE REQUIREMENTS DETAILED HEREIN, A LICENSED ENGINEER OR ARCHITECT SHALL PREPARE SITE SPECIFIC DOCUMENTS FOR USE WITH THIS DOCUMENT.


HERMES F. NORERO LICENSE No. 73778 STATE OF FLORIDA PROFESSIONAL ENGINEER

HERMES F. NORERO, P.E.
LICENSE NO. 73778
398 E. DANIA BEACH BLVD., STE. 338
DANIA BEACH, FL 33004
FBPE CERT. OF AUTHORIZATION NO. 29578

FL41922

DATE: 10.06.2023

DWG. BY: SH | CHK. BY: HFN

SCALE: NTS

DWG. #: LRA022

SHEET: 10 OF 16

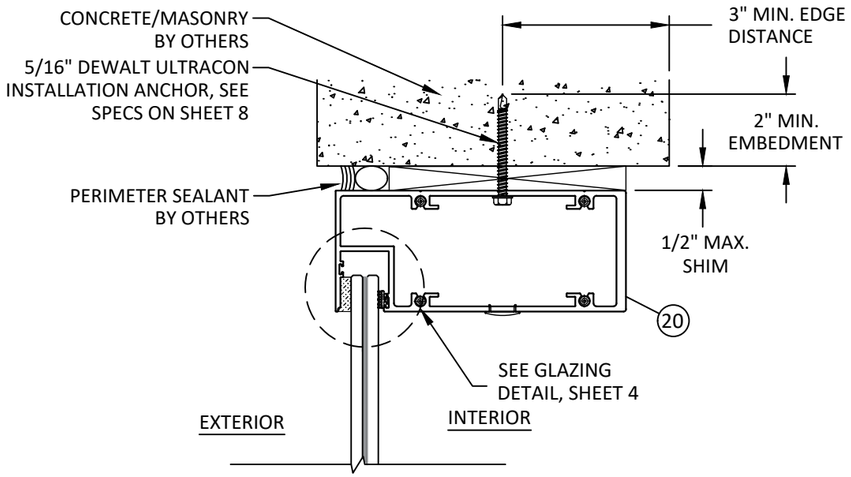


F
11

## VERTICAL SECTION

HEAD - CONCRETE/MASONRY SUBSTRATE

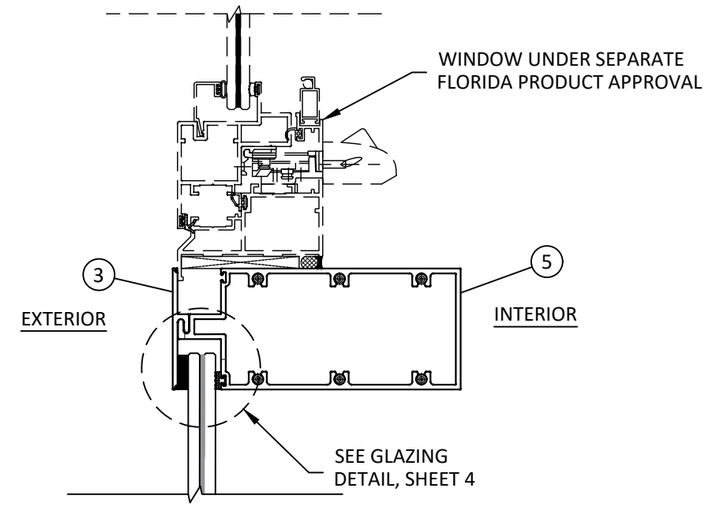


G
11

## VERTICAL SECTION

HORIZONTAL MULLION

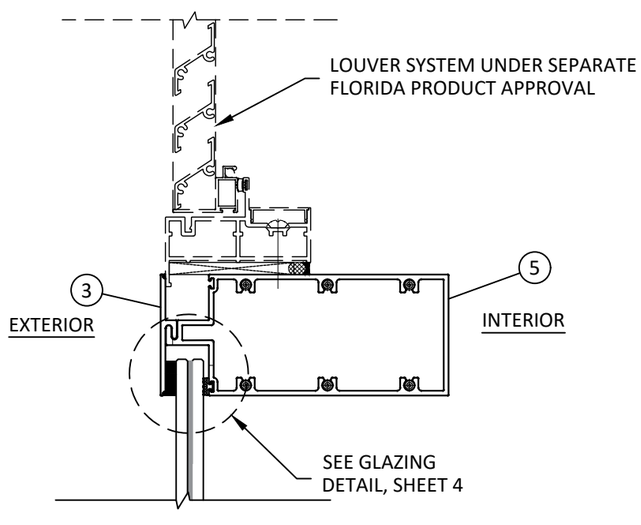


H
11

## VERTICAL SECTION

HORIZONTAL MULLION

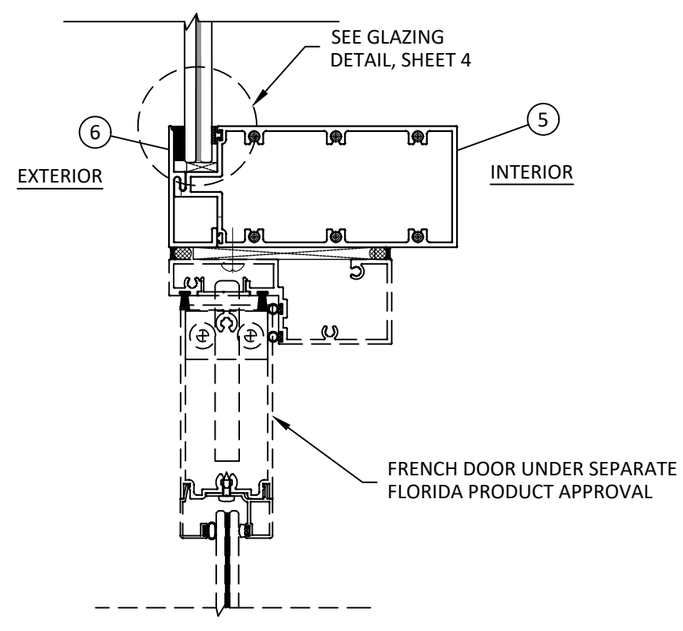


I
11

## VERTICAL SECTION

HORIZONTAL MULLION

LINEA ROSSA
WINDOWS & DOORS
1850 NW. 84TH AVE., STE. 114
DORAL, FL 33126
PH: (305)815-8797

TITLE: *GLR-U96 & GLR-U97*
*WINDOW WALL SYSTEMS - LMI*
*(HVHZ)(IMPACT)*
VERTICAL SECTIONS

PREPARED BY: BUILDING DROPS, INC.
398 E. DANIA BEACH BLVD., STE. 338
DANIA BEACH, FL 33004
PH: (954)399-8478
FAX: (954)744.4738
WEB: www.buildingdrops.com
BUILDING DROPS

| REMARKS | BY | DATE |
|---|---|---|
| | | |
| | | |
| | | |
| | | |

THE INSTALLATION DETAILS DESCRIBED HEREIN ARE GENERIC AND MAY NOT REFLECT ACTUAL CONDITIONS FOR A SPECIFIC SITE. IF SITE CONDITIONS CAUSE INSTALLATION TO DEVIATE FROM THE REQUIREMENTS DETAILED HEREIN, A LICENSED ENGINEER OR ARCHITECT SHALL PREPARE SITE SPECIFIC DOCUMENTS FOR USE WITH THIS DOCUMENT.

HERMES F. NORERO
LICENSE
No. 73778
STATE OF
FLORIDA
PROFESSIONAL ENGINEER
HERMES F. NORERO
LICENSE NO. 73778
398 E. DANIA BEACH BLVD., STE. 338
DANIA BEACH, FL 33004
FBPE CERT. OF AUTHORIZATION NO. 29578

FL41922

DATE: 10.06.2023

DWG. BY: SH | CHK. BY: HFN

SCALE: NTS

DWG. #: LRA022

SHEET: OF 16

11

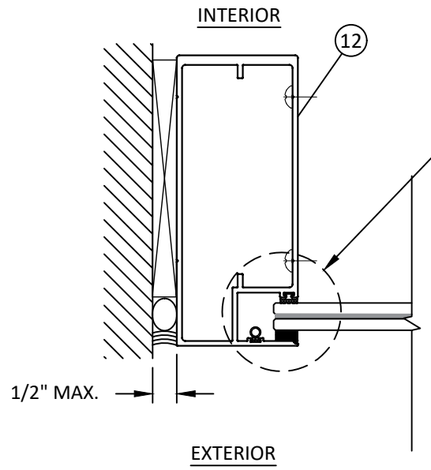


J 12 HORIZONTAL SECTION
JAMB - J2

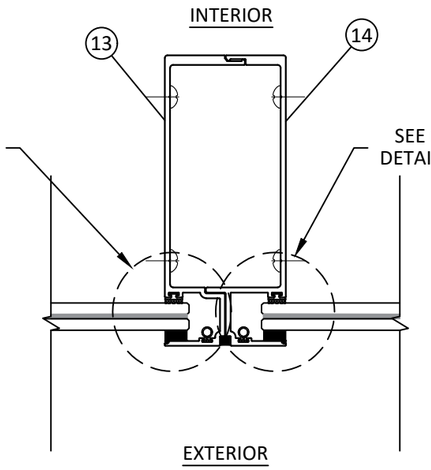


K 12 HORIZONTAL SECTION
MULLION - M1

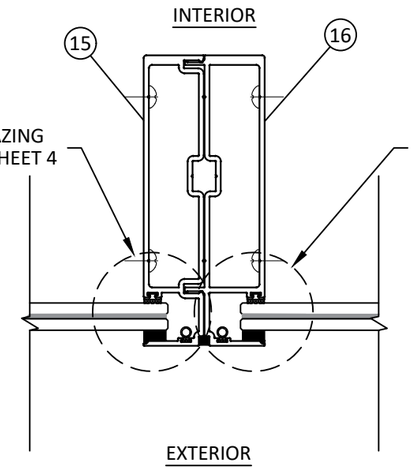


L 12 HORIZONTAL SECTION
MULLION - M2

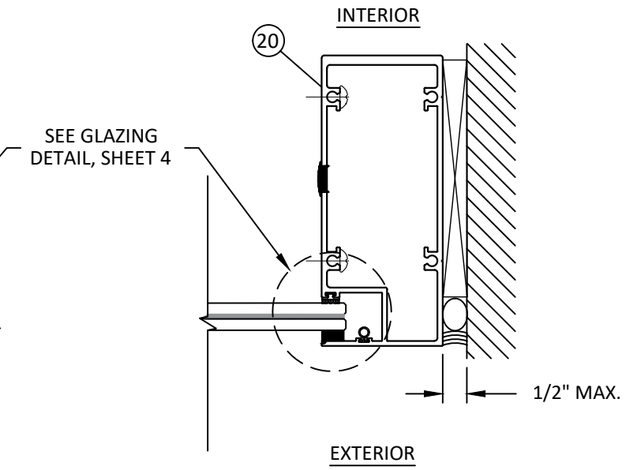


M 12 HORIZONTAL SECTION
JAMB - J1

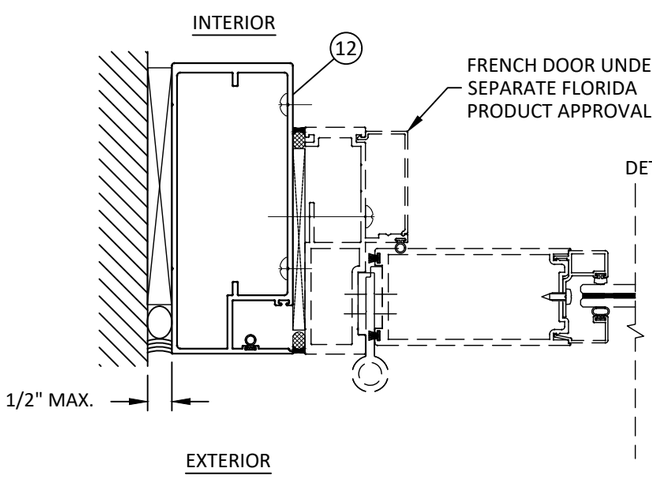


N 12 HORIZONTAL SECTION
JAMB - J2

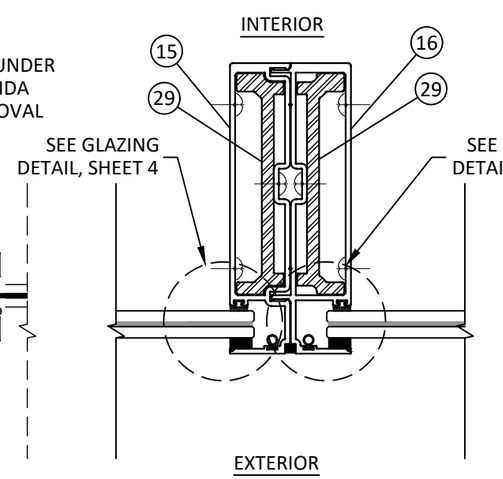


O 12 HORIZONTAL SECTION
MULLION - M3

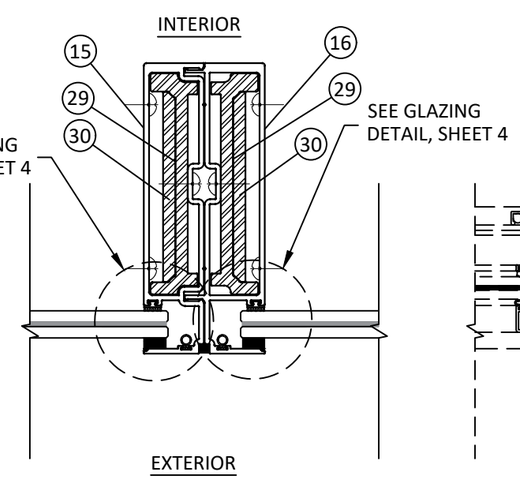


P 12 HORIZONTAL SECTION
MULLION - M4

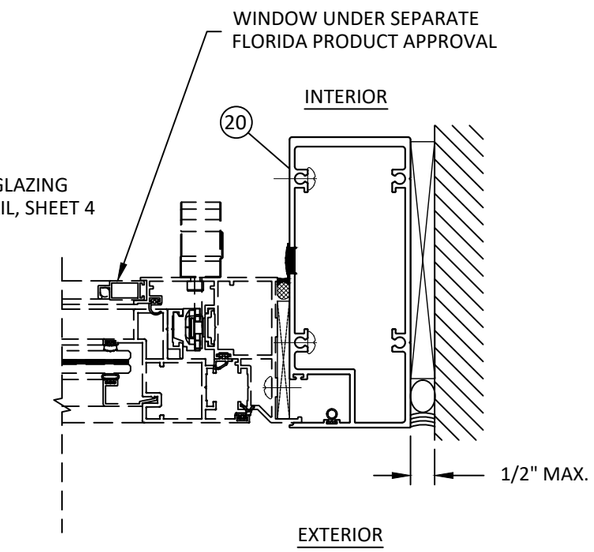


Q 12 HORIZONTAL SECTION
JAMB - J1

LINEA ROSSA WINDOWS & DOORS
1850 NW. 84TH AVE., STE. 114
DORAL, FL 33126
PH: (305)815-8797

TITLE: *GLR-U96 & GLR-U97 WINDOW WALL SYSTEMS - LMI (HVHZ)(IMPACT)*
HORIZONTAL SECTIONS

PREPARED BY: BUILDING DROPS, INC.
398 E. DANIA BEACH BLVD., STE. 338
DANIA BEACH, FL 33004
PH: (954)399-8478
FAX: (954)744.4738
WEB: www.buildingdrops.com

| REMARKS | BY | DATE |
|---|---|---|
| | | |
| | | |
| | | |
| | | |

THE INSTALLATION DETAILS DESCRIBED HEREIN ARE GENERIC AND MAY NOT REFLECT ACTUAL CONDITIONS FOR A SPECIFIC SITE. IF SITE CONDITIONS CAUSE INSTALLATION TO DEVIATE FROM THE REQUIREMENTS DETAILED HEREIN, A LICENSED ENGINEER OR ARCHITECT SHALL PREPARE SITE SPECIFIC DOCUMENTS FOR USE WITH THIS DOCUMENT.

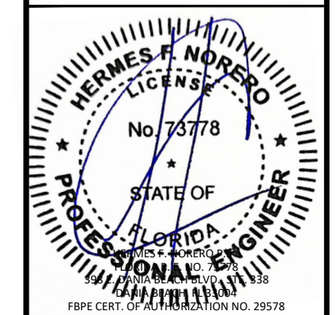


FL41922

DATE: 10.06.2023
DWG. BY: SH
CHK. BY: HFN
SCALE: NTS
DWG. #: LRA022
SHEET: OF 16
12

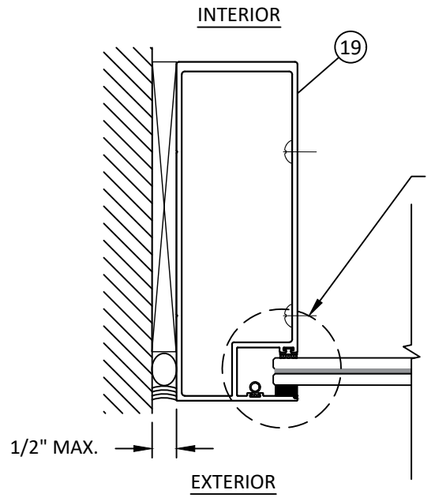


R 13 HORIZONTAL SECTION
JAMB - J3

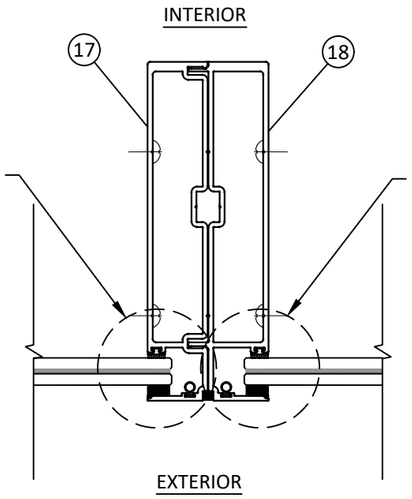


S 13 HORIZONTAL SECTION
MULLION - M5

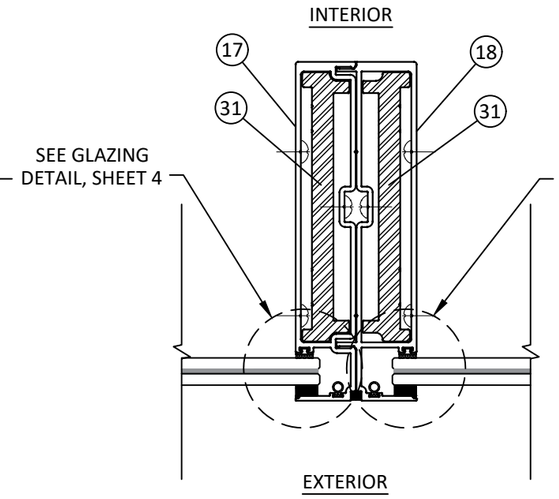


T 13 HORIZONTAL SECTION
MULLION - M6

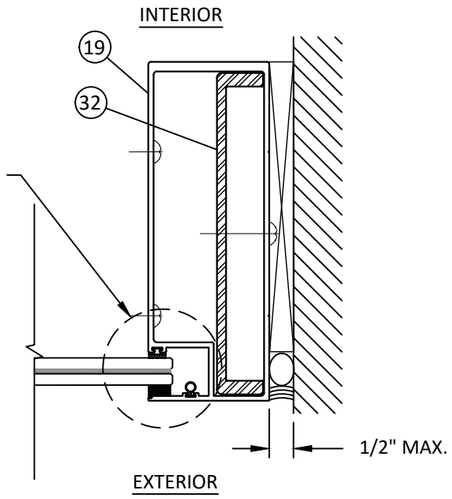


U 13 HORIZONTAL SECTION
JAMB - J4

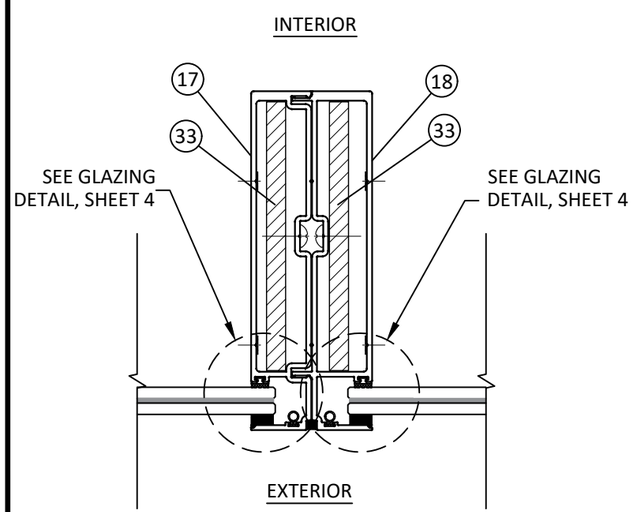


V 13 HORIZONTAL SECTION
MULLION - M7

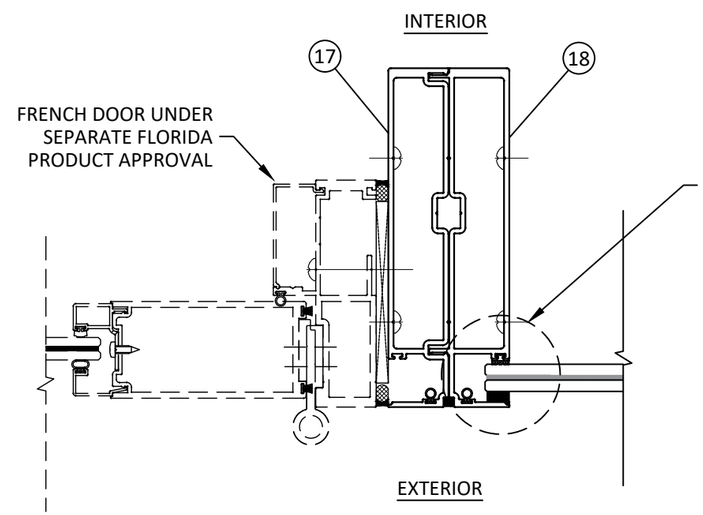


W 13 HORIZONTAL SECTION
MULLION - M5

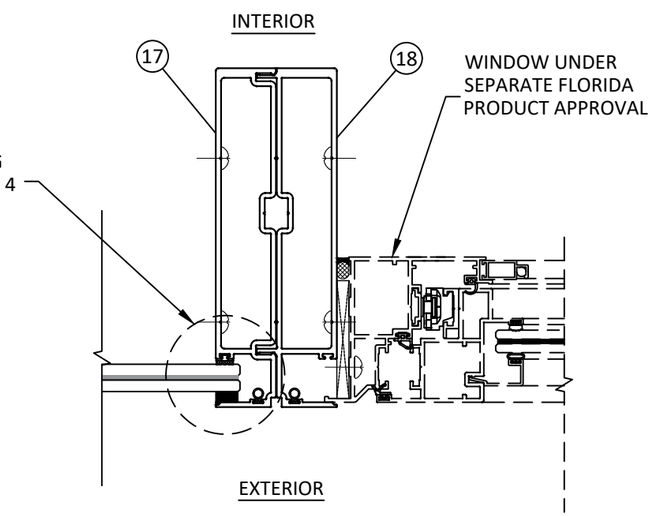


X 13 HORIZONTAL SECTION
MULLION - M5

LINEA ROSSA
WINDOWS & DOORS
1850 NW. 84TH AVE., STE. 114
DORAL, FL 33126
PH: (305)815-8797

TITLE: *GLR-U96 & GLR-U97 WINDOW WALL SYSTEMS - LMI (HVHZ)(IMPACT)*
HORIZONTAL SECTIONS

PREPARED BY: BUILDING DROPS, INC.
398 E. DANIA BEACH BLVD., STE. 338
DANIA BEACH, FL 33004
PH: (954)399-8478
FAX: (954)744.4738
WEB: www.buildingdrops.com
BUILDING DROPS

| REMARKS | BY | DATE |
|---|---|---|
| | | |
| | | |
| | | |
| | | |

THE INSTALLATION DETAILS DESCRIBED HEREIN ARE GENERIC AND MAY NOT REFLECT ACTUAL CONDITIONS FOR A SPECIFIC SITE. IF SITE CONDITIONS CAUSE INSTALLATION TO DEVIATE FROM THE REQUIREMENTS DETAILED HEREIN, A LICENSED ENGINEER OR ARCHITECT SHALL PREPARE SITE SPECIFIC DOCUMENTS FOR USE WITH THIS DOCUMENT.

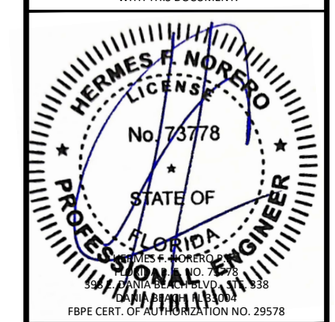


FL41922

| | |
|---|---|
| DATE: 10.06.2023 | |
| DWG. BY: SH | CHK. BY: HFN |
| SCALE: NTS | |
| DWG. #: LRA022 | |
| SHEET: 13 | OF 16 |

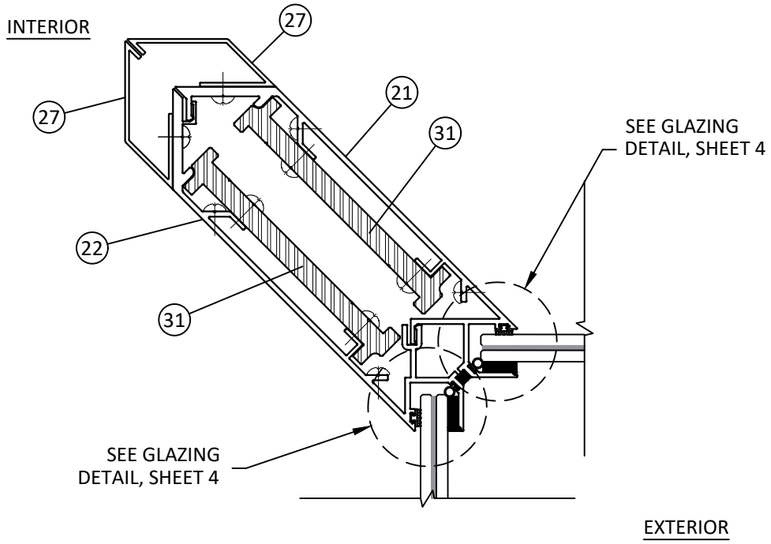


AA 14 HORIZONTAL SECTION

CORNER MULLION - C4

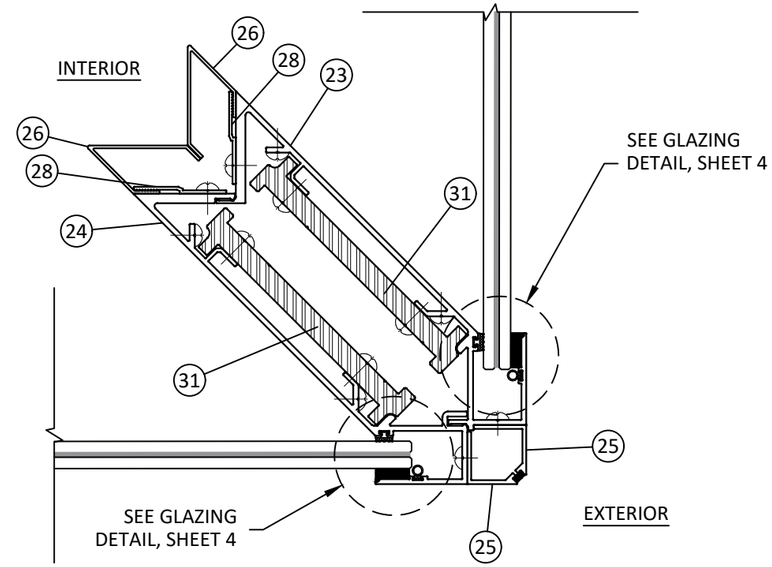


BB 14 HORIZONTAL SECTION

CORNER MULLION - C3

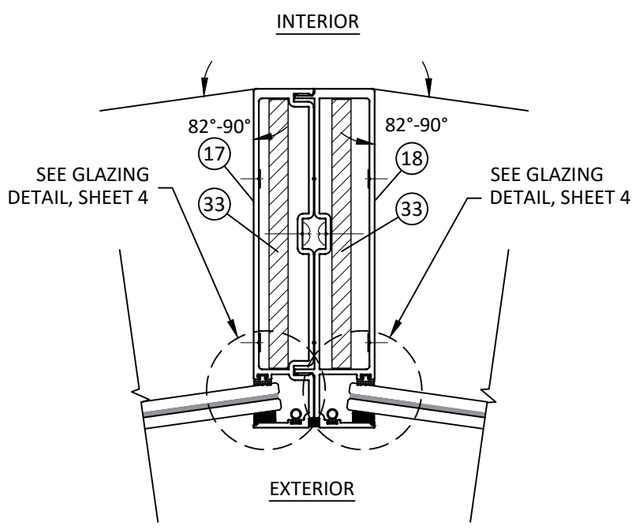


CC 14 HORIZONTAL SECTION

82-90 DEGREE MULLION

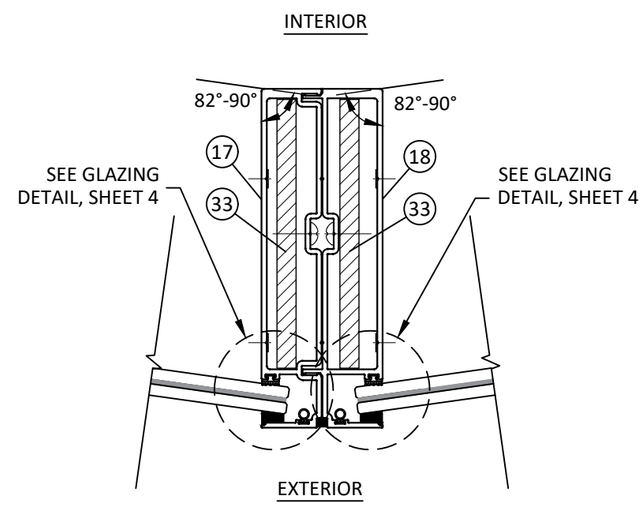


DD 14 HORIZONTAL SECTION

82-90 DEGREE MULLION

LINEA ROSSA
WINDOWS & DOORS
1850 NW. 84TH AVE., STE. 114
DORAL, FL 33126
PH: (305)815-8797

TITLE: *GLR-U96 & GLR-U97 WINDOW WALL SYSTEMS - LMI (HVHZ)(IMPACT)*

HORIZONTAL SECTIONS

PREPARED BY: BUILDING DROPS, INC.
398 E. DANIA BEACH BLVD., STE. 338
DANIA BEACH, FL 33004
PH: (954)399-8478
FAX: (954)744.4738
WEB: www.buildingdrops.com
BUILDING DROPS

| REMARKS | BY | DATE |
|---|---|---|
| | | |
| | | |
| | | |
| | | |

THE INSTALLATION DETAILS DESCRIBED HEREIN ARE GENERIC AND MAY NOT REFLECT ACTUAL CONDITIONS FOR A SPECIFIC SITE. IF SITE CONDITIONS CAUSE INSTALLATION TO DEVIATE FROM THE REQUIREMENTS DETAILED HEREIN, A LICENSED ENGINEER OR ARCHITECT SHALL PREPARE SITE SPECIFIC DOCUMENTS FOR USE WITH THIS DOCUMENT.

HERMES F. NORERO
LICENSE
No. 73778
STATE OF
FLORIDA
PROFESSIONAL ENGINEER

HERMES F. NORERO
FL LICENSE NO. 73778
398 E. DANIA BEACH BLVD., STE. 338
DANIA BEACH, FL 33004
FBPE CERT. OF AUTHORIZATION NO. 29578

FL41922

DATE: 10.06.2023

DWG. BY: SH

CHK. BY: HFN

SCALE: NTS

DWG. #: LRA022

SHEET: 14 OF 16

## BILL OF MATERIALS

| ITEM | PART NO. | DESCRIPTION | MATERIAL |
|---|---|---|---|
| 1 | GLR-U96-01 | TOP & BOTTOM | 6005-T5 |
| 2 | GLR-U96-02 | ANCHOR | 6005-T5 |
| 3 | GLR-U96-03 | GLASS STOP | 6063-T6 |
| 4 | GLR-U96-04 | COVER | 6063-T6 |
| 5 | GLR-U96-05 | INTERMEDIATE | 6005-T5 |
| 6 | GLR-U96-06 | GLASS STOP | 6063-T6 |
| 7 | NOT USED | - | - |
| 8 | NOT USED | - | - |
| 9 | GLR-U97-09 | COVER | 6063-T6 |
| 10 | GLR-U96-10 | HEAD RECEPTOR | 6005-T5 |
| 11 | GLR-U96-11 | COVER | 6063-T6 |
| 12 | GLR-U96-12 | JAMB | 6005-T5 |
| 13 | GLR-U96-13 | FEMALE MULLION | 6005-T5 |
| 14 | GLR-U96-14 | MALE MULLION | 6005-T5 |
| 15 | GLR-U96-15 | FEMALE MULLION | 6005-T5 |
| 16 | GLR-U96-16 | MALE MULLION | 6005-T5 |
| 17 | GLR-U97-17 | FEMALE MULLION | 6005-T5 |
| 18 | GLR-U97-18 | MALE MULLION | 6005-T5 |
| 19 | GLR-U97-19 | JAMB | 6005-T5 |
| 20 | GLR-U96-20 | JAMB | 6005-T5 |
| 21 | GLR-U96-21 | INNER CORNER FEMALE MULLION | 6005-T5 |
| 22 | GLR-U97-22 | INNER CORNER MALE MULLION | 6005-T5 |
| 23 | GLR-U96-23 | OUTER CORNER FEMALE MULLION | 6005-T5 |
| 24 | GLR-U96-24 | OUTER CORNER MALE MULLION | 6005-T5 |
| 25 | GLR-U96-25 | INNER CORNER FEMALE MULLION | 6063-T6 |
| 26 | GLR-U97-26 | INNER CORNER MALE MULLION | 6063-T6 |
| 27 | GLR-U97-27 | OUTER CORNER FEMALE MULLION | 6063-T6 |
| 28 | GLR-U97-28 | OUTER CORNER MALE MULLION | 6063-T6 |
| 29 | GLR-U96-29 | ALUMINUM REINFORCEMENT | 6005-T5 |
| 30 | GLR-U96-30 | ALUMINUM REINFORCEMENT | 6005-T5 |
| 31 | GLR-U97-31 | ALUMINUM REINFORCEMENT | 6005-T5 |
| 32 | GLR-U97-32 | ALUMINUM REINFORCEMENT | 6005-T5 |
| 33 | - | STEEL REINFORCEMENT | STEEL |
| 34 | - | #14X1" COUNTERSUNK SCREW | STEEL |
| 35 | - | SETTING BLOCK | EPDM |
| 36 | - | GLASS GASKET | EPDM |
| 37 | - | #14X1" PAN HEAD SMS | STEEL |
| 38 | | WASHER | STEEL |
| 39 | | ADJUSTING BOLT | STEEL |
| 40 | NOT USED | - | - |
| 41 | | SCREW | STEEL |
| 42 | | GASKET | EPDM |

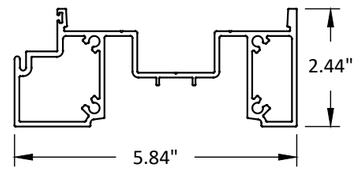


1 TOP & BOTTOM

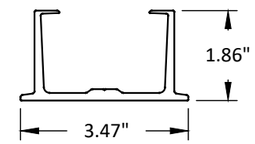


2 ANCHOR

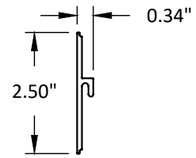


3 GLASS STOP

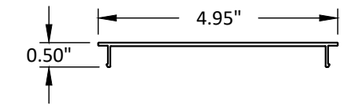


4 COVER

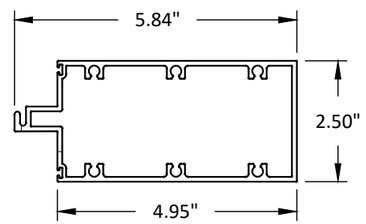


5 INTERMEDIATE

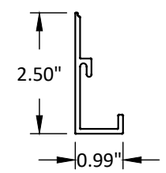


6 GLASS STOP

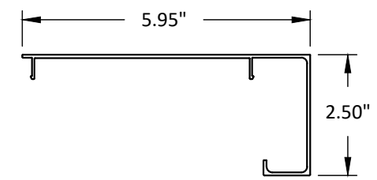


9 COVER

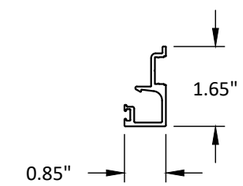


10 HEAD RECEPTOR

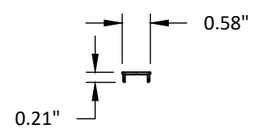


11 COVER

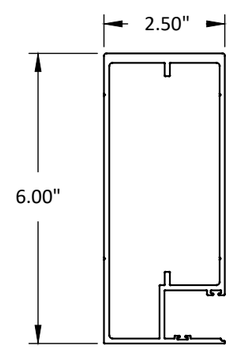


12 JAMB

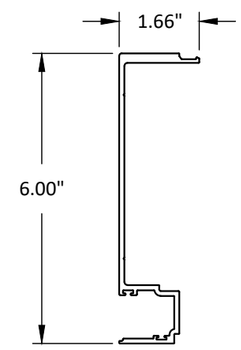


13 FEMALE MULLION

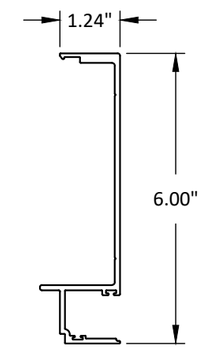


14 MALE MULLION


LINEA ROSSA WINDOWS & DOORS
1850 NW. 84TH AVE., STE. 114
DORAL, FL 33126
PH: (305)815-8797


TITLE: *GLR-U96 & GLR-U97 WINDOW WALL SYSTEMS - LMI (HVHZ)(IMPACT)*

BILL OF MATERIALS & COMPONENTS


PREPARED BY: BUILDING DROPS, INC.
398 E. DANIA BEACH BLVD., STE. 338
DANIA BEACH, FL 33004
PH: (954)399-8478
FAX: (954)744.4738
WEB: www.buildingdrops.com


| REMARKS | BY | DATE |
|---|---|---|
| | | |
| | | |
| | | |
| | | |


THE INSTALLATION DETAILS DESCRIBED HEREIN ARE GENERIC AND MAY NOT REFLECT ACTUAL CONDITIONS FOR A SPECIFIC SITE. IF SITE CONDITIONS CAUSE INSTALLATION TO DEVIATE FROM THE REQUIREMENTS DETAILED HEREIN, A LICENSED ENGINEER OR ARCHITECT SHALL PREPARE SITE SPECIFIC DOCUMENTS FOR USE WITH THIS DOCUMENT.


HERMES F. NORERO LICENSE No. 73778 STATE OF FLORIDA PROFESSIONAL ENGINEER

HERMES F. NORERO
FL LICENSE NO. 73778
398 E. DANIA BEACH BLVD., STE. 338
DANIA BEACH, FL 33004
FBPE CERT. OF AUTHORIZATION NO. 29578

FL41922

DATE: 10.06.2023

DWG. BY: SH | CHK. BY: HFN

SCALE: NTS

DWG. #: LRA022

SHEET: 15 OF 16

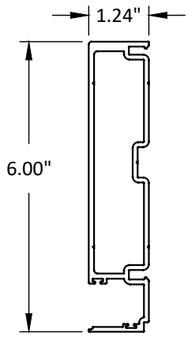


15 FEMALE MULLION

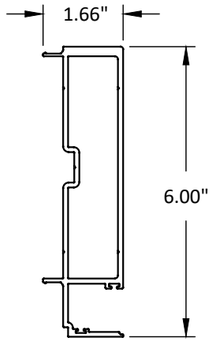


16 MALE MULLION

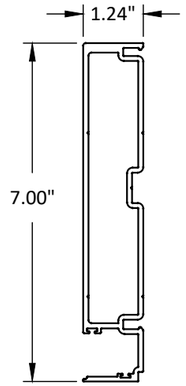


17 FEMALE MULLION

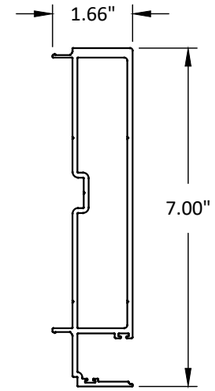


18 MALE MULLION

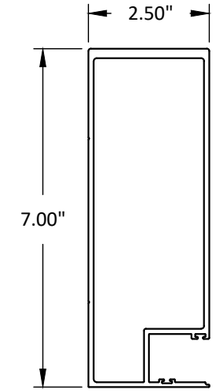


19 JAMB

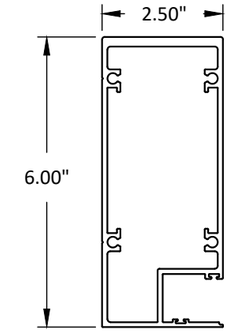


20 JAMB

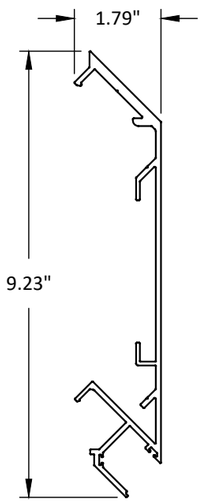


21 INNER CORNER FEMALE MULLION

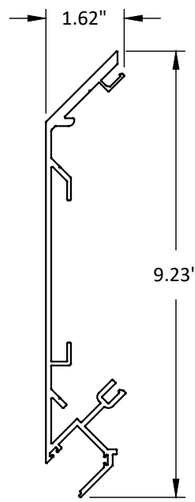


22 INNER CORNER MALE MULLION

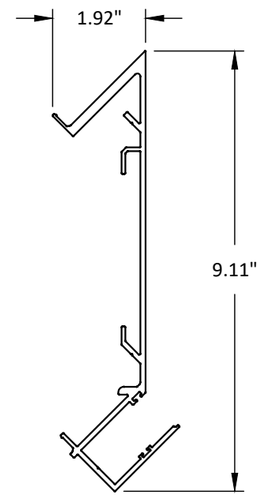


23 OUTER CORNER FEMALE MULLION

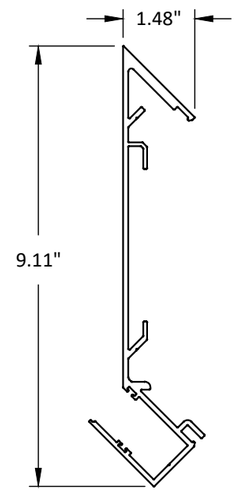


24 OUTER CORNER MALE MULLION

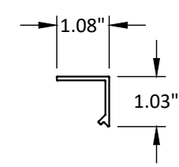


25 INNER CORNER FEMALE MULLION

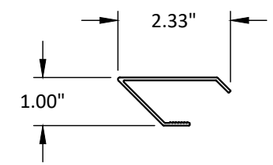


26 INNER CORNER MALE MULLION

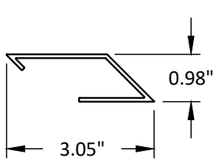


27 OUTER CORNER FEMALE MULLION

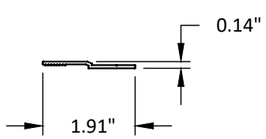


28 OUTER CORNER MALE MULLION

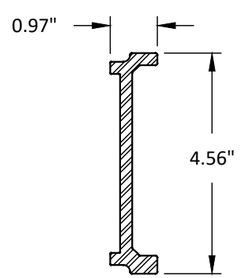


29 ALUMINUM REINFORCEMENT

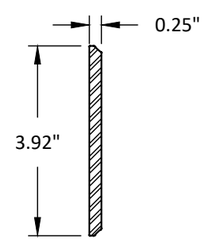


30 ALUMINUM REINFORCEMENT

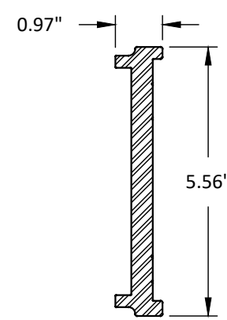


31 ALUMINUM REINFORCEMENT

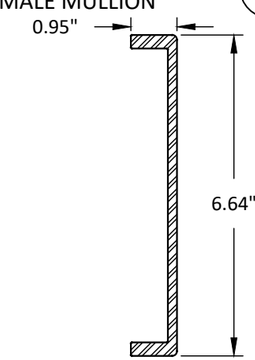


32 ALUMINUM REINFORCEMENT

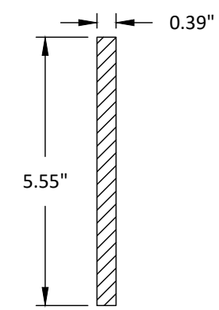


33 STEEL REINFORCEMENT


LINEA ROSSA WINDOWS & DOORS
1850 NW. 84TH AVE., STE. 114
DORAL, FL 33126
PH: (305)815-8797


TITLE: *GLR-U96 & GLR-U97 WINDOW WALL SYSTEMS - LMI (HVHZ)(IMPACT)* COMPONENTS


PREPARED BY: BUILDING DROPS, INC.
398 E. DANIA BEACH BLVD., STE. 338
DANIA BEACH, FL 33004
PH: (954)399-8478
FAX: (954)744.4738
WEB: www.buildingdrops.com


| REMARKS | BY | DATE |
|---|---|---|
| | | |
| | | |
| | | |
| | | |

THE INSTALLATION DETAILS DESCRIBED HEREIN ARE GENERIC AND MAY NOT REFLECT ACTUAL CONDITIONS FOR A SPECIFIC SITE. IF SITE CONDITIONS CAUSE INSTALLATION TO DEVIATE FROM THE REQUIREMENTS DETAILED HEREIN, A LICENSED ENGINEER OR ARCHITECT SHALL PREPARE SITE SPECIFIC DOCUMENTS FOR USE WITH THIS DOCUMENT.

HERMES F. NORERO LICENSE No. 73778 STATE OF FLORIDA PROFESSIONAL ENGINEER


HERMES F. NORERO, P.E.
LIC. NO. 73778
398 E. DANIA BEACH BLVD., STE. 338
DANIA BEACH, FL 33004
FBPE CERT. OF AUTHORIZATION NO. 29578


FL41922

DATE: 10.06.2023

DWG. BY: SH | CHK. BY: HFN

SCALE: NTS

DWG. #: LRA022

SHEET: 16 OF 16